QSB(I/N)

KAWAMOTO
VERTICAL MULTISTAGE INLINE PUMPS
2 POLES / 50 Hz
SUCTION SIZE DIN25~150

QSBI

QSB

KAWAMOTO PUMP ASIA CO.,LTD.

PERFORMANCE CHART

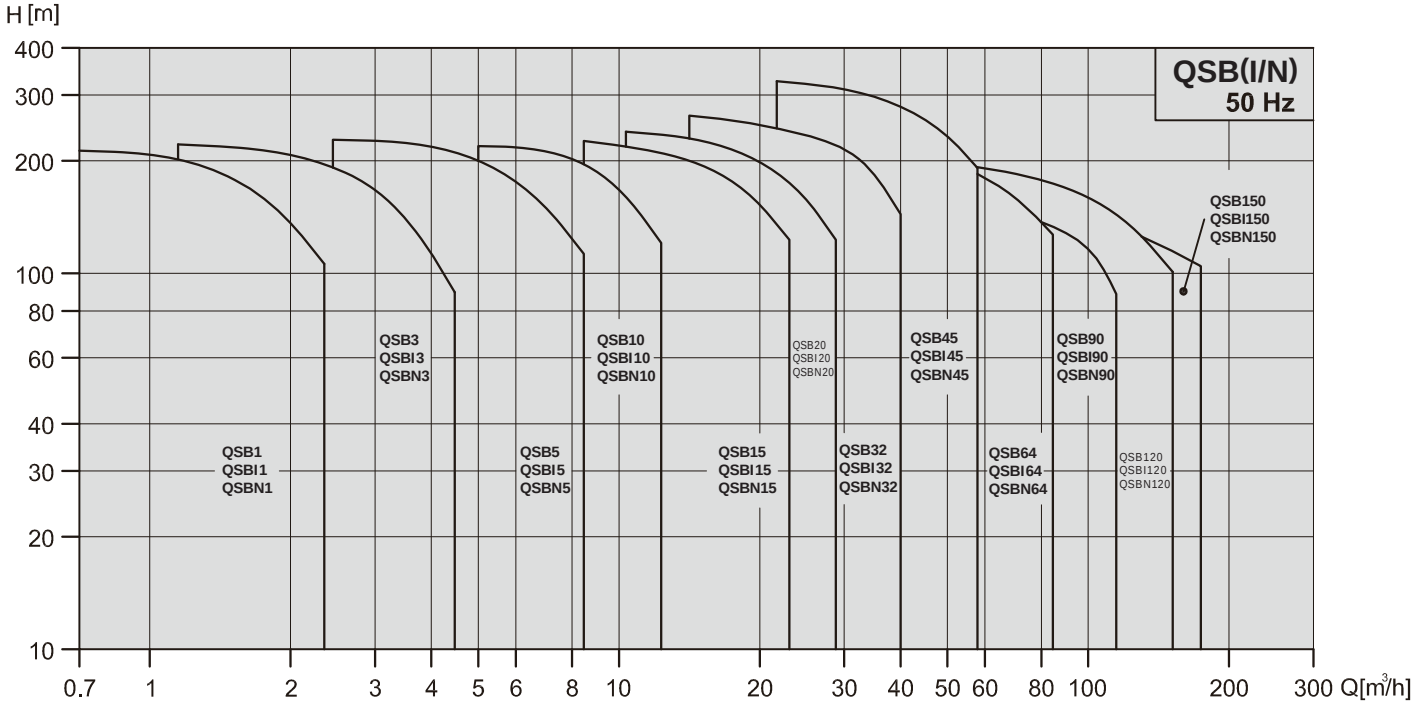

PRODUCT DATA

Range	QSB, QSBI, QSBN					
	1	3	5	10	15	20
50Hz						
Nominal flow 〔m^3/h〕	1.8	3	5.7	10	17	21
Flow range 〔m^3/h〕	0.7-2.4	1.2-4.5	2.5-8.5	5-13	8.5-23.5	10.5-29
Max. pressure 〔bar〕	21.5	23	24	21.5	23	24.3
Fluid temperature 〔°C〕	-15 to +120					
Motor power 〔kW〕	0.37-2.2	0.37-3	0.37-5.5	0.37-7.5	1.1-15	1.1-18.5
Version						
QSB: Cast iron and stainless steel EN 1.4301/AISI 304	●	●	●	●	●	●
QSBI: Stainless steel EN 1.4301/AISI 304	●	●	●	●	●	●
QSBN: Stainless steel EN 1.4401/AISI 316	●	●	●	●	●	●
Motor						
Mains connection 1~〔V/Hz〕 (Permissible voltage tolerance ± 10%)	220-240 V 50 Hz					
Mains connection 3~〔V/Hz〕 (Permissible voltage tolerance ± 10%)	0.37-7.5 kW 220-240/380-415 V 50 Hz From 11 kW 380-415 V 50 Hz					
Insulation class	F					
Enclosure class	IP 55					
Ambient temperature	50° C					
QSB Pipe Connection						
Flange	DN 25/ DN 32	DN 25/ DN 32	DN 25/ DN 32	DN 40	DN 50	DN 50
QSBI, QSBN Pipe Connection						
Flange	DN 25/ DN 32	DN 25/ DN 32	DN 25/ DN 32	DN 40	DN 50	DN 50
Victaulic-connections	R $1^1/_4$ DN32	R $1^1/_4$ DN 32	R$1^1/_4$ DN 32	R 2 DN 50	R 2 DN 50	R 2 DN 50
Mechanical Seals						
SiC/SiC	Standard					
Seals						
EPDM	Standard					
Viton						

* Flange standards : Refer to dimensional drawings

PRODUCT DATA

Range	QSB, QSBI, QSBN					
	32	45	64	90	120	150
50Hz						
Nominal flow 〔m^3/h〕	30	45	64	90	120	150
Flow range 〔m^3/h〕	15-40	22-58	30-85	45-120	60-160	75-180
Max. pressure 〔bar〕	27.5	33	21.8	20	20.4	18.7
Fluid temperature 〔°C〕	-15 to +120					
Motor power 〔kW〕	1.5-30	3-45	4-45	5.5-45	11-75	11-75
Version						
QSB: Cast iron and stainless steel EN 1.4301/AISI 304	●	●	●	●	●	●
QSBI: Stainless steel EN 1.4301/AISI 304	●	●	●	●	●	●
QSBN: Stainless steel EN 1.4401/AISI 316	●	●	●	●	●	●
Motor						
Mains connection 1~〔V/Hz〕 (Permissible voltage tolerance ± 10%)	220-240 V 50 Hz					
Mains connection 3~〔V/Hz〕 (Permissible voltage tolerance ± 10%)	0.37-7.5 kW 220-240/380-415 V 50 Hz From 11 kW 380-415 V 50 Hz					
Insulation class	F					
Enclosure class	IP 55					
Ambient temperature	50 °C					
QSB Pipe Connection						
Flange	DN 65	DN 80	DN100	DN100	DN125	DN125
QSBI, QSBN Pipe Connection						
Flange	DN 65	DN 80	DN100	DN100	DN125	DN125
Victaulic-connections	N/A	N/A	N/A	N/A	N/A	N/A
Mechanical Seals						
SiC/SiC	Standard					
Seals						
EPDM	Standard				0.37kW-45kW	
Viton					55kW-75kW	

* Flange standards : Refer to dimensional drawings

APPLICATIONS AND FEATURES

The QSB, QSBI and QSBN pumps are non-self priming vertical multistage pump of in-line design, flange or with Victaulic coupling with equally sized suction and discharge ports. Stage construction with stainless steel impellers, chambers and pressure casing. Pump stub shaft and motor shaft of the IEC-standards motor are directly close coupled. All pumps are equipped with a cartridge type mechanical seal for easy maintenance.

QSB, QSBI and QSBN pumps pumps have different pump sizes and various numbers of stages to provide the flow and the pressure required.

■ WATER SUPPLY AND PRESSURE BOOSTING

Pressure boosting in buildings, hotels, residential complexes
Pressure booster stations, supply of water networks
Pressure boosting for industrial water supply

■ IRRIGATION AND AGRICULTURE

Greenhouses
Sprinkler irrigation
Field irrigation (flooding)

■ LIGHT INDUSTRY

Washing and cleaning systems
Car washing facilities
Fire fighting systems
Process water systems
Machine tools (cooling lubricants)

■ WATER TREATMENT

Water softeners and de-mineralization
Reverse Osmosis systems
Distillation systems
Filtration
Ultra-filtration systems

■ HEATING, VENTILATION AND AIR-CONDITIONING

Boilers
Induction heating
Heat exchangers
Refrigerators
Cooling towers and systems
Temperature control systems

MODEL CODE

QSB(I/N) - 10 - 5 - 1 - M○○F

- Motor (kW)
- Number of small impeller
- Number of stage
- Flow rate in m^3/h
- Type range
  - QSB : Cast Iron
  - QSBI : SUS304
  - QSBN : SUS316

MOTOR

- Squirrel cage in short circuit, aluminum casing up to 22 kW, totally enclosed, fan-cooled, 2-pole standard motor.
- Standard supply Stairs motors up to 15 kW. Other motor brands for higher powers.
- Electrical data
  - ◎ Enclosure class: IP55
  - ◎ Insulation class: F
  - ◎ Standard voltages: P2: 0.37-7.5 KW: 3 x 220-240/380-415 V
    P2: From 11 KW 3 x 380-415 V
- The motors have efficiency values that fall within the range normally referred to as high efficiency.
- Ambient temperature: Max. +50°C

MOTOR DATA

Motor Type				Nominal current in [A]				
HP	kW	Pole	Flange	Frame	3~220V	3~240V	3~380V	3~415V
0.5	0.37	2	B14	71A	1.7	1.9	1.0	1.1
0.75	0.55			71B	2.6	2.9	1.5	1.7
1.0	0.75			80A	3.4	3.4	2.0	2.0
1.5	1.1			80B	4.8	5.0	2.8	2.9
2.0	1.5			90S	6.1	6.2	3.5	3.6
3.0	2.2			90L	9.7	11.1	5.6	6.4
4.0	3.0			100L	11.9	12.1	6.9	7.0
5.5	4.0			112M	15.1	15.2	8.7	8.8
7.5	5.5		B5	132S	18.7	18.0	10.8	10.4
10	7.5			132S	25.5	24.9	14.7	14.4
			B14		3~380V	3~415V	3~660V	3~720V
4.0	3.0			100L	6.8	6.9	3.9	4.0
5.5	4.0			112M	8.7	8.3	5.0	4.8
7.5	5.5		B5	132S	10.9	10.8	6.3	6.2
10	7.5			132S	14.9	14.8	8.6	8.5
15	11			160L	22.2	20.9	12.8	12.1
20	15			160L	30.2	28.4	17.4	16.4
							3~380V	3~660V
15	11			160M			21.0	12.1
20	15			160M			28.4	16.3
25	18.5			160L			34.7	20.0
30	22			180M			41.1	23.7
40	30			200L			55.7	32.1
50	37			200L			68.3	39.3
60	45			225M			82.7	47.6
75	55			250M			100.7	58.0
100	75			280S			136.5	78.6

MECHANICAL SEAL

Standard Cartridge type mechanical seal made of Silicon Carbide/Silicon Carbide/EPDM or Viton. Based on the type of application, alternative materials are available for the seal and the elastomers. The cartridge type mechanical seal can be replaced in minutes without special tools and without dismantling the pump.

■ LIST OF MATERIALS

Q : Silicon carbide	E : EPDM
U : Tungsten carbide	V : Viton
B : Carbon	

■ TYPE OF SEAL

Seal Type	QSB / QSBI / QSBN		
	1/3/5/10/15/20 /32/45/64/90	120/150	
		0.5-60HP	75-100HP
Mechanical Seals			
S: O-ring seal Cartridge type	●	●	
B: Rubber bellows seal Cartridge type			●
QQ	●	●	●
UU	Optional	Optional	
QB	Optional	Optional	
UB	Optional	Optional	
Seals			
E	●	●	●
V	Optional	Optional	Optional

MAXIMUM OPERATING AND INLET PRESSURES

Stages	Maximum Operating Pressure	Stages	Maximum Inlet Pressures
QSB, QSBI, QSBN 1			
2-36	25bar	2-36	10bar
QSB, QSBI, QSBN 3			
2-36	25bar	2-29	10bar
		31-36	15bar
QSB, QSBI, QSBN 5			
2-36	25bar	2-16	10bar
		18-36	15bar
QSB, QSBI, QSBN 10			
1-16	16bar	1-6	8bar
17-22	25bar	7-22	10bar
QSB, QSBI, QSBN 15			
1-10	16bar	1-3	8bar
12-17	25bar	4-17	10bar
QSB, QSBI, QSBN 20			
1-10	16bar	1-3	8bar
12-17	25bar	4-17	10bar
QSB, QSBI, QSBN 32			
(1-1)-7	16bar	(1-1)-4	4bar
(8-2)-14	30bar	(5-2)-10	10bar
		(11-2)-14	15bar
QSB, QSBI, QSBN 45			
(1-1)-5	16bar	(1-1)-2	4bar
(6-2)-11	30bar	(3-2)-5	10bar
(12-2)-(13-2)	33bar	(6-2)-(13-2)	15bar
QSB, QSBI, QSBN 64			
(1-1)-5	16bar	(1-1)-(2-2)	4bar
(6-2)-(8-1)	30bar	(2-1)-(4-2)	10bar
		(4-1)-(8-1)	15bar
QSB, QSBI, QSBN 90			
(1-1) - 4	16bar	(1-1) - 1	4bar
(5-2) - 6	30bar	(2-1) - (3-2)	10bar
		3 - 6	15bar
QSB, QSBI, QSBN 120			
1-7	30bar	1-(2-1)	10bar
		2-(5-1)	15bar
		(6-1)-7	20bar
QSB, QSBI, QSBN 150			
(1-1)-6	30bar	(1-1)-1	10bar
		(2-1)-(4-2)	15bar
		(5-2)-6	20bar

＊Rule to follow：The inlet pressure+ the pressure against a closed valve < Max. Operating pressure.

SECTION VIEW

QSB-1, 3, 5, 10, 15, 20

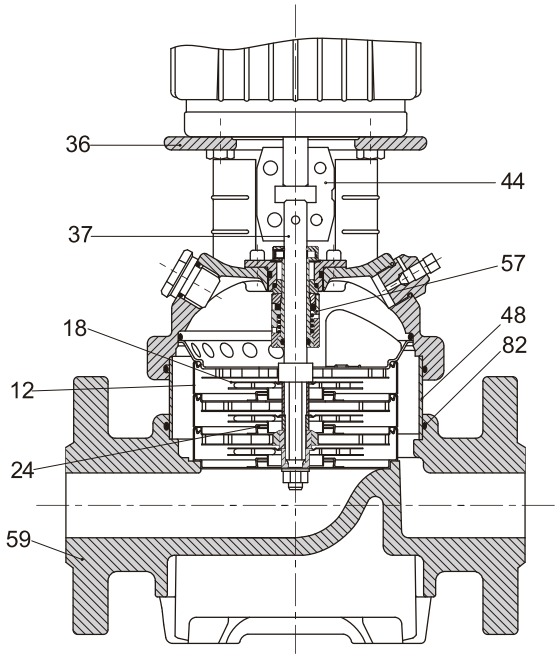

QSBI(N)-1, 3, 5, 10, 15, 20

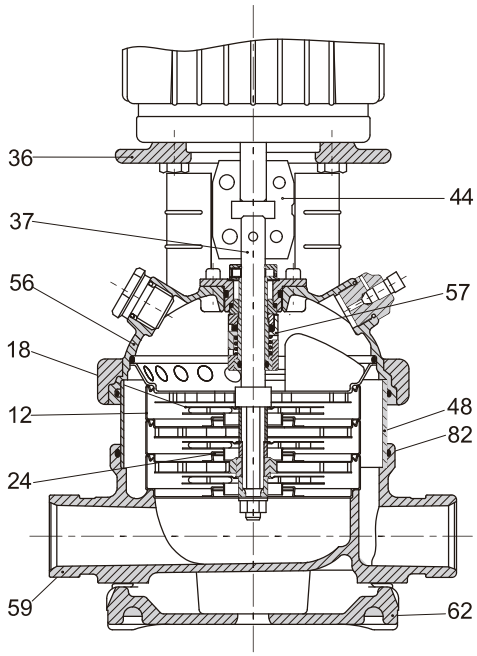

Pos.	Name	Material	QSB 1, 3, 5,10,15,20		QSBI 1, 3, 5,10,15,20		QSBN 1, 3, 5,10,15,20	
			Standard		Standard		Standard	
			Europe	USA	Europe	USA	Europe	USA
36	Pump head	Cast Iron	EN-GJL-200	ASTM 25B	EN-GJS-450-10	ASTM 65-45-12	EN-GJS-450-10	ASTM 65-45-12
56	Pump head cover	Stainless steel	N/A		1.4301	AISI 304	1.4401	AISI 316
18	Impeller	Stainless steel	1.4301	AISI 304	1.4301	AISI 304	1.4401	AISI 316
37	Shaft	Stainless steel	1.4057	AISI 431	1.4057	AISI 431	1.4401	AISI 316
48	Outer Sleeve	Stainless steel	1.4301	AISI 304	1.4301	AISI 304	1.4401	AISI 316
82	O-ring for outer sleeve	EPDM						
12	Chamber	Stainless steel	1.4301	AISI 304	1.4301	AISI 304	1.4401	AISI 316
24	Neck ring	PTFE						
59	Base	Cast Iron	EN-GJL-200	ASTM 25B	N/A			
	Base	Stainless steel	N/A		1.4301	AISI 304	1.4401	AISI 316
62	Base plate	Cast Iron	N/A		EN-GJL-200	ASTM 25B	EN-GJL-200	ASTM 25B
44	Coupling	Fe-Cu-C	SINT C11	MPIF FC0525	SINT C11	MPIF FC0525	SINT C11	MPIF FC0525
57	Mechanical seal	Cartridge type						

SECTION VIEW

QSB-32, 45, 64, 90

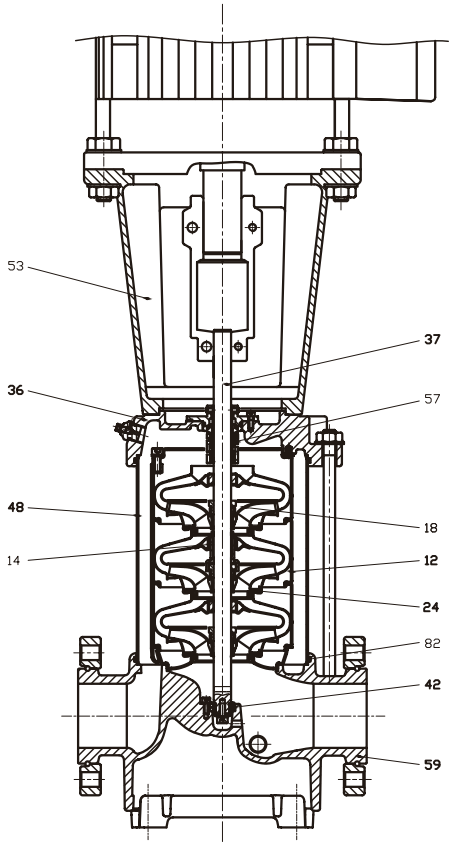

QSBI(N)-32, 45, 64, 90

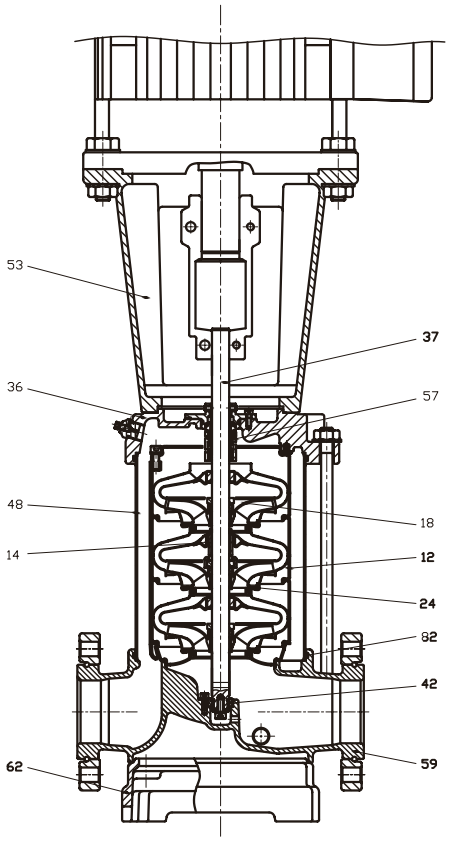

Pos.	Name	Material	QSB 32, 45, 64, 90		QSBI 32, 45, 64, 90		QSBN 32, 45, 64, 90	
			Standard		Standard		Standard	
			Europe	USA	Europe	USA	Europe	USA
36	Pump head	Cast Iron	EN-GJL-250	ASTM 35B				
		Stainless steel			1.4301	AISI 304	1.4401	AISI 316
53	Motor Bracket	Cast Iron	EN-GJL-250	ASTM 35B	EN-GJL-250	ASTM 35B	EN-GJL-250	ASTM 35B
18	Impeller	Stainless steel	1.4301	AISI 304	1.4301	AISI 304	1.4401	AISI 316
37	Shaft	Stainless steel	1.4057	AISI 431	1.4057	AISI 431	1.4401	AISI 316
48	Outer Sleeve	Stainless steel	1.4301	AISI 304	1.4301	AISI 304	1.4401	AISI 316
82	O-ring for outer sleeve	EPDM						
12	Chamber	Stainless steel	1.4301	AISI 304	1.4301	AISI 304	1.4401	AISI 316
24	Neck ring	Carbon Fiber + POB + PTFE						
59	Base	Cast Iron	EN-GJL-250	ASTM 35B	N/A			
	Base	Stainless steel	N/A		1.4301	AISI 304	1.4401	AISI 316
62	Base plate	Cast Iron	N/A		EN-GJL-250	ASTM 35B	EN-GJL-250	ASTM 35B
57	Mechanical seal	Cartridge type						
14	Bearing ring		Bronze				POB+Graphite+PTFE	
42	Bottom bearing ring	Tungsten carbide/ Tungsten carbide						

SECTION VIEW

QSB-120, 150

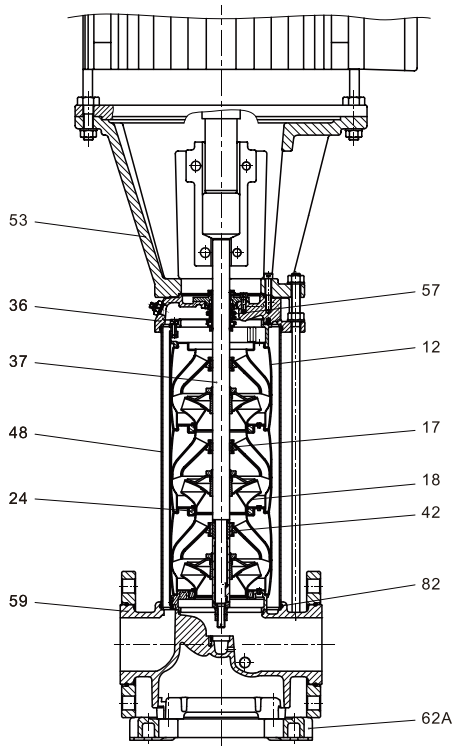

QSBI(N)-120, 150

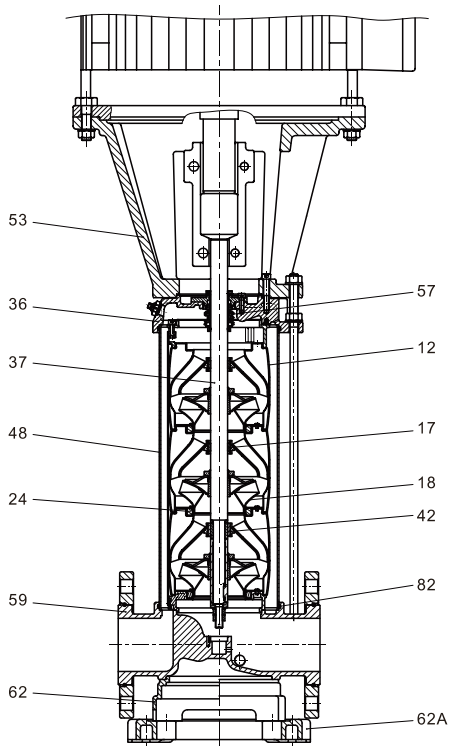

Pos.	Name	Material	QSB 120, 150 Standard		QSBI 120, 150 Standard		QSBN 120, 150 Standard	
			Europe	USA	Europe	USA	Europe	USA
36	Pump head	Cast Iron	EN-GJL-250	ASTM 35B	N/A			
		Stainless steel	N/A		1.4301	AISI 304	1.4401	AISI 316
53	Motor bracket (15HP~60HP)	Cast Iron	EN-GJL-250	ASTM 35B	EN-GJL-250	ASTM 35B	EN-GJL-250	ASTM 35B
	Motor bracket (75HP~100HP)	Cast Iron	EN-GJS-450-10	ASTM 65-45-12	EN-GJS-450-10	ASTM 65-45-12	EN-GJS-450-10	ASTM 65-45-12
17	bearing ring	PTFE						
18	Impeller	Stainless steel	1.4301	AISI 304	1.4301	AISI 304	1.4401	AISI 316
37	Shaft	Stainless steel	1.4057	AISI 431	1.4057	AISI 431	1.4401	AISI 316
48	Outer sleeve	Stainless steel	1.4301	AISI 304	1.4301	AISI 304	1.4401	AISI 316
82	O-ring for outer sleeve	EPDM						
12	Chamber	Stainless steel	1.4301	AISI 304	1.4301	AISI 304	1.4401	AISI 316
24	Neck ring	PTFE						
59	Base	Cast Iron	EN-GJL-250	ASTM 35B	N/A			
		Stainless steel	N/A		1.4301	AISI 304	1.4401	AISI 316
62	Base plate	Cast Iron	N/A		EN-GJS-450-10	ASTM 65-45-12	EN-GJS-450-10	ASTM 65-45-12
62A	Base plate	Cast Iron	EN-GJS-450-10	ASTM 65-45-12	EN-GJS-450-10	ASTM 65-45-12	EN-GJS-450-10	ASTM 65-45-12
57	Mechanical seal	Cartridge type						
42	Bottom bearing ring	SiC / SiC						

EXPECTED PERFORMANCE CURVE

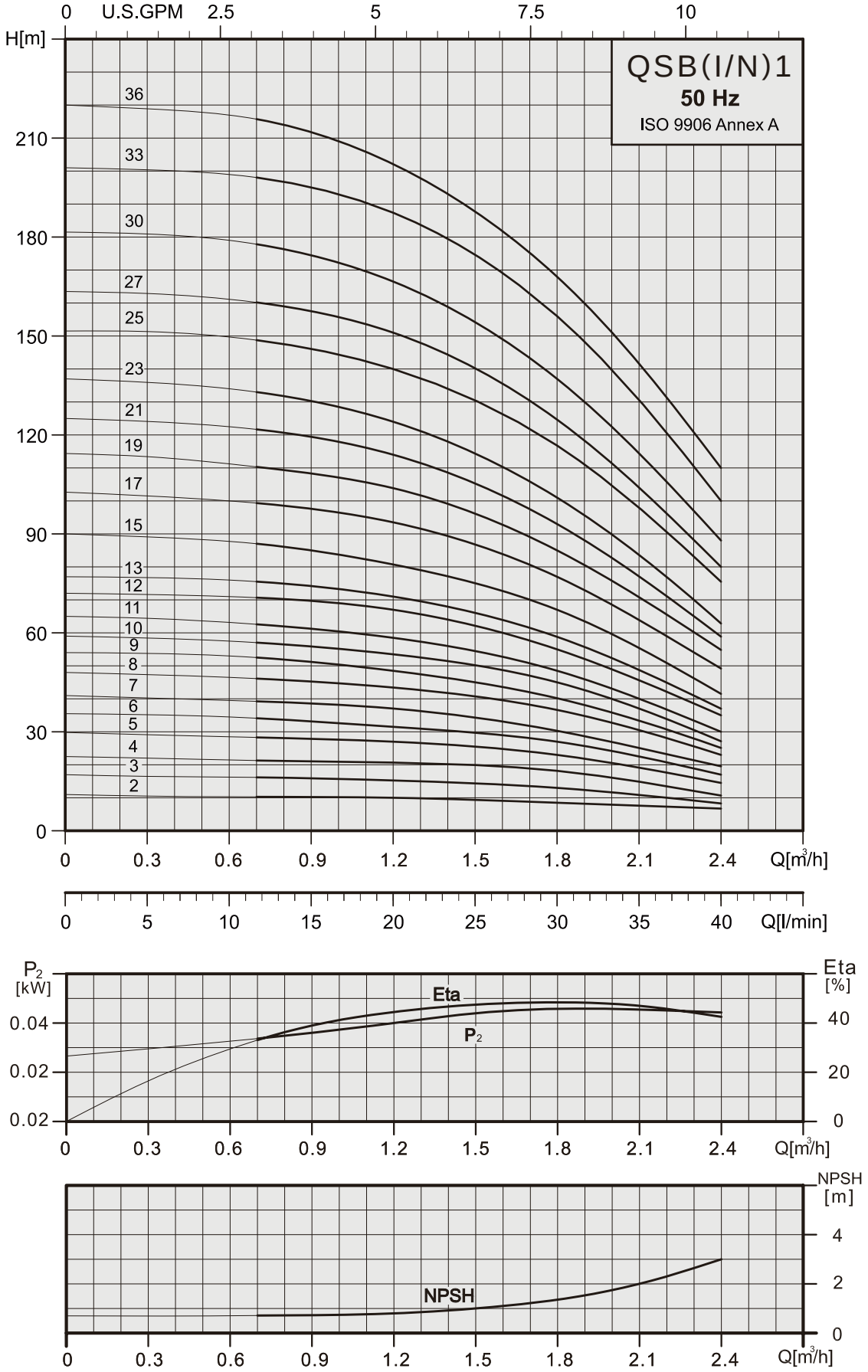

PUMP DIMENSION-QSB 1

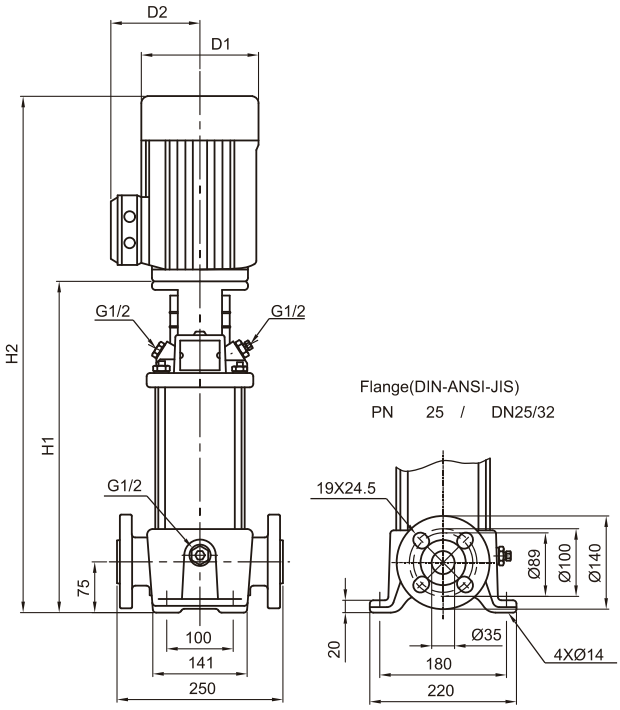

Pump type	Motor	QSB				
		Dimension[mm]				Net weight [kg]
	P_2	DIN flange		D1	D2	
	[kW]	H1	H2			DIN flange
QSB1-2-M0.37F	0.37	279	474	141	115	23.4
QSB1-3-M0.37F	0.37	279	474	141	115	23.4
QSB1-4-M0.37F	0.37	297	492	141	115	23.8
QSB1-5-M0.37F	0.37	315	510	141	115	24.2
QSB1-6-M0.37F	0.37	333	528	141	115	24.5
QSB1-7-M0.37F	0.37	351	546	141	115	24.9
QSB1-8-M0.55F	0.55	369	564	141	115	25.8
QSB1-9-M0.55F	0.55	387	582	141	115	26.1
QSB1-10-M0.55F	0.55	405	600	141	115	26.5
QSB1-11-M0.55F	0.55	423	618	141	115	26.9
QSB1-12-M0.75F	0.75	447	682	141	115	29.4
QSB1-13-M0.75F	0.75	465	700	141	115	29.8
QSB1-15-M0.75F	0.75	501	736	141	115	30.5
QSB1-17-M1.1F	1.1	537	772	141	115	32.3
QSB1-19-M1.1F	1.1	573	808	141	115	33.1
QSB1-21-M1.1F	1.1	609	844	141	115	33.8
QSB1-23-M1.1F	1.1	645	880	141	115	34.6
QSB1-25-M1.5F	1.5	697	988	177	141	44.0
QSB1-27-M1.5F	1.5	733	1024	177	141	44.8
QSB1-30-M1.5F	1.5	787	1078	177	141	45.9
QSB1-33-M2.2F	2.2	841	1132	177	141	49.9
QSB1-36-M2.2F	2.2	895	1186	177	141	51.0

PUMP DIMENSION-QSBI, QSBN 1

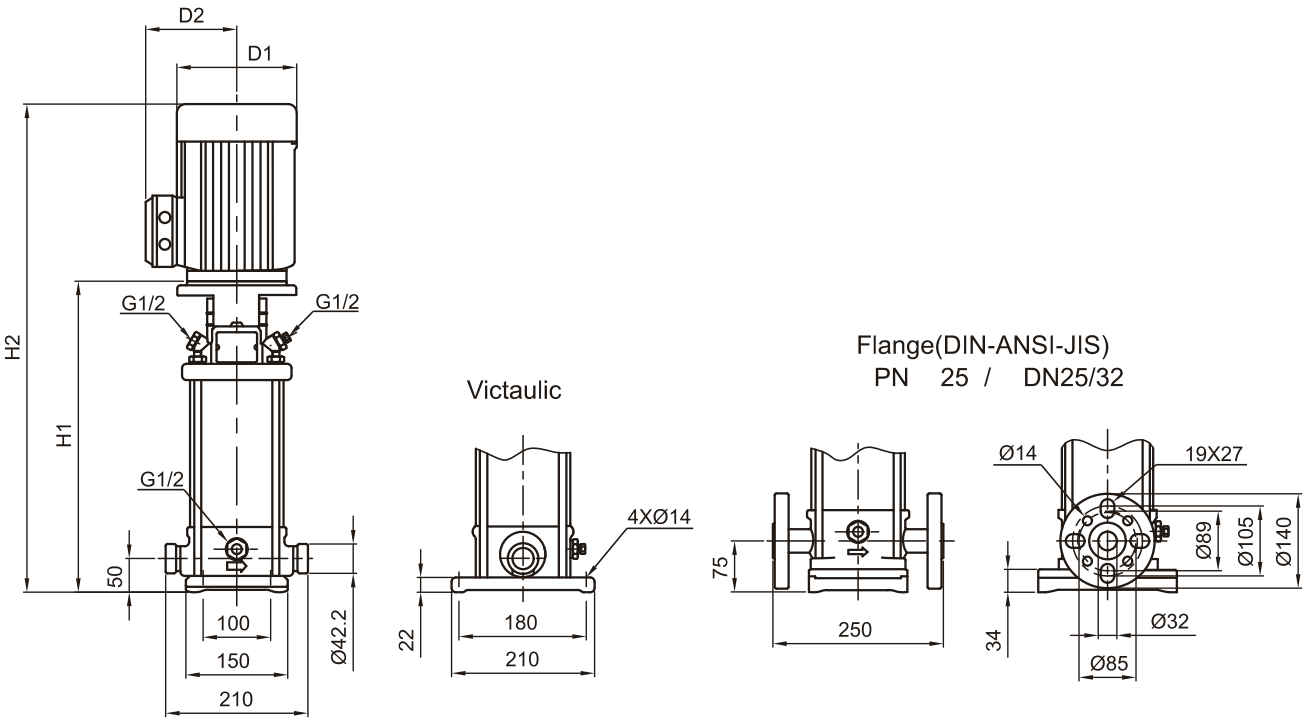

Pump type	Motor	QSBI, QSBN							
		Dimension [mm]						Net weight [kg]	
	P_2	Victaulic		DIN flange		D1	D2	Victaulic	DIN flange
	[kW]	H1	H2	H1	H2				
QSBI(N)1-2-M0.37F	0.37	257	452	282	477	141	115	19.3	20.2
QSBI(N)1-3-M0.37F	0.37	257	452	282	477	141	115	19.3	20.3
QSBI(N)1-4-M0.37F	0.37	275	470	300	495	141	115	19.7	20.6
QSBI(N)1-5-M0.37F	0.37	293	488	318	513	141	115	20.1	21.0
QSBI(N)1-6-M0.37F	0.37	311	506	336	531	141	115	20.4	21.4
QSBI(N)1-7-M0.37F	0.37	329	524	354	549	141	115	20.8	21.7
QSBI(N)1-8-M0.55F	0.55	347	542	372	567	141	115	21.7	22.6
QSBI(N)1-9-M0.55F	0.55	365	560	390	585	141	115	22.0	23.0
QSBI(N)1-10-M0.55F	0.55	383	578	408	603	141	115	22.4	23.3
QSBI(N)1-11-M0.55F	0.55	401	596	426	621	141	115	22.8	23.7
QSBI(N)1-12-M0.75F	0.75	425	660	450	685	141	115	25.2	26.1
QSBI(N)1-13-M0.75F	0.75	443	678	468	703	141	115	25.6	26.5
QSBI(N)1-15-M0.75F	0.75	479	714	504	739	141	115	26.3	27.2
QSBI(N)1-17-M1.1F	1.1	515	750	540	775	141	115	28.1	29.1
QSBI(N)1-19-M1.1F	1.1	551	786	576	811	141	115	28.8	29.8
QSBI(N)1-21-M1.1F	1.1	587	822	612	847	141	115	29.6	30.6
QSBI(N)1-23-M1.1F	1.1	623	858	648	883	141	115	30.4	31.3
QSBI(N)1-25-M1.5F	1.5	675	966	700	991	177	141	39.8	40.8
QSBI(N)1-27-M1.5F	1.5	711	1002	736	1027	177	141	40.6	41.5
QSBI(N)1-30-M1.5F	1.5	765	1056	790	1081	177	141	41.7	42.6
QSBI(N)1-33-M2.2F	2.2	819	1110	844	1135	177	141	45.6	46.6
QSBI(N)1-36-M2.2F	2.2	873	1164	898	1189	177	141	46.7	47.7

EXPECTED PERFORMANCE CURVE

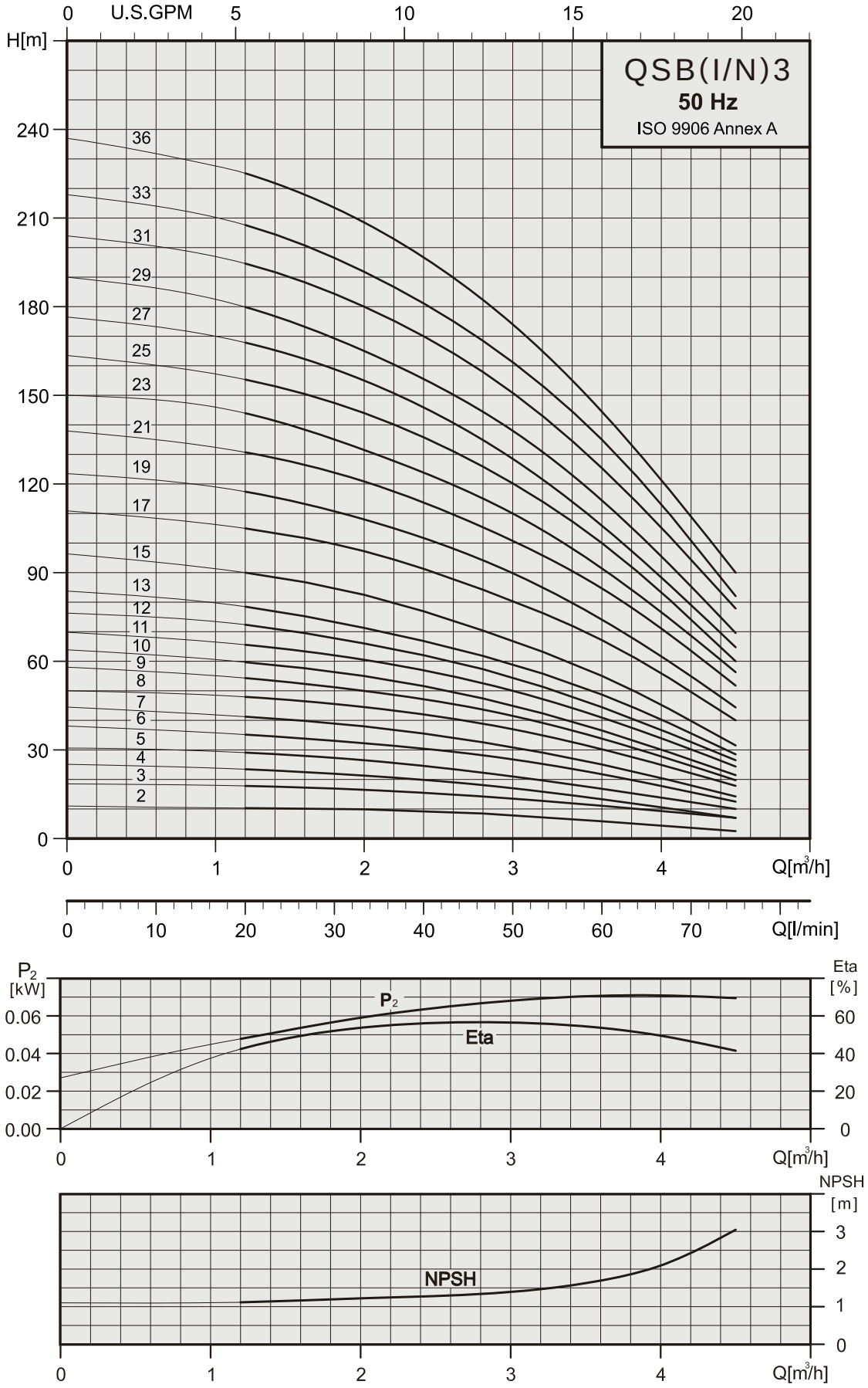

PUMP DIMENSION-QSB 3

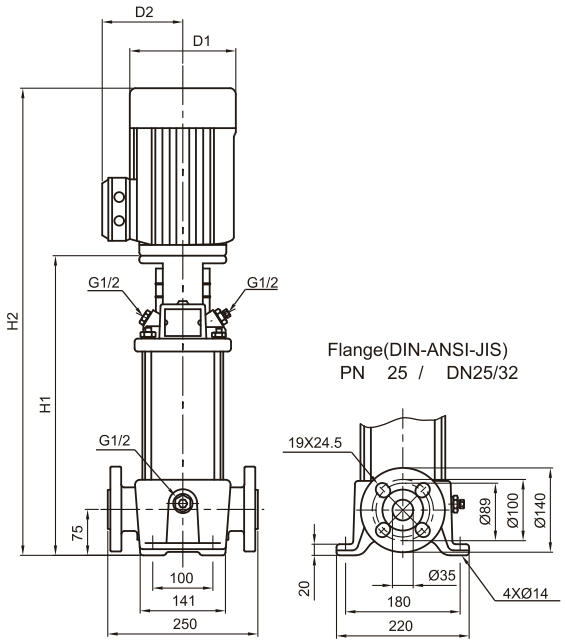

Pump type	Motor	QSB				
		Dimension[mm]				Net weight [kg]
	P_2	DIN flange		D1	D2	
	[kW]	H1	H2			DIN flange
QSB3-2-M0.37F	0.37	279	474	141	115	23.4
QSB3-3-M0.37F	0.37	279	474	141	115	23.4
QSB3-4-M0.37F	0.37	297	492	141	115	23.8
QSB3-5-M0.37F	0.37	315	510	141	115	24.2
QSB3-6-M0.55F	0.55	333	528	141	115	25.0
QSB3-7-M0.55F	0.55	351	546	141	115	25.4
QSB3-8-M0.75F	0.75	375	610	141	115	27.9
QSB3-9-M0.75F	0.75	393	628	141	115	28.3
QSB3-10-M0.75F	0.75	411	646	141	115	28.7
QSB3-11-M1.1F	1.1	429	664	141	115	30.2
QSB3-12-M1.1F	1.1	447	682	141	115	30.5
QSB3-13-M1.1F	1.1	465	700	141	115	30.9
QSB3-15-M1.1F	1.1	501	736	141	141	31.6
QSB3-17-M1.5F	1.5	553	844	177	141	41.0
QSB3-19-M1.5F	1.5	589	880	177	141	41.8
QSB3-21-M2.2F	2.2	625	916	177	141	45.3
QSB3-23-M2.2F	2.2	661	952	177	141	46.1
QSB3-25-M2.2F	2.2	697	988	177	141	46.8
QSB3-27-M2.2F	2.2	733	1024	177	141	47.6
QSB3-29-M2.2F	2.2	769	1060	177	141	48.3
QSB3-31-M3.0F	3	809	1125	197	147	56.6
QSB3-33-M3.0F	3	845	1161	197	147	57.4
QSB3-36-M3.0F	3	899	1215	197	147	58.5

PUMP DIMENSION-QSBI, QSBN 3

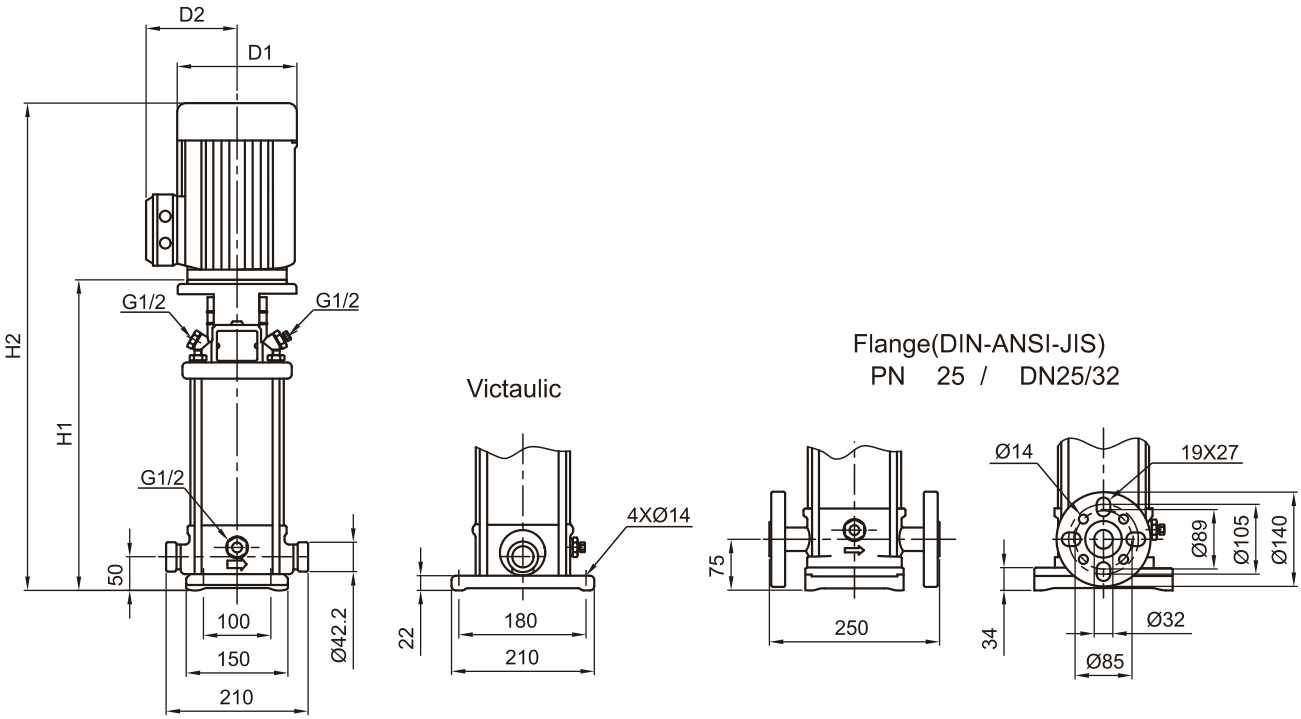

Pump type	Motor	QSBI, QSBN							
		Dimension [mm]						Net weight [kg]	
	P_2	Victaulic		DIN flange		D1	D2	Victaulic	DIN flange
	[kW]	H1	H2	H1	H2				
QSBI(N)3-2-M0.37F	0.37	257	452	282	477	141	115	19.3	20.2
QSBI(N)3-3-M0.37F	0.37	257	452	282	477	141	115	19.3	20.3
QSBI(N)3-4-M0.37F	0.37	275	470	300	495	141	115	19.7	20.6
QSBI(N)3-5-M0.37F	0.37	293	488	318	513	141	115	20.1	21.0
QSBI(N)3-6-M0.55F	0.55	311	506	336	531	141	115	20.9	21.9
QSBI(N)3-7-M0.55F	0.55	329	524	354	549	141	115	21.3	22.2
QSBI(N)3-8-M0.75F	0.75	353	588	378	613	141	115	23.7	24.6
QSBI(N)3-9-M0.75F	0.75	371	606	396	631	141	115	24.0	25.0
QSBI(N)3-10-M0.75F	0.75	389	624	414	649	141	115	24.4	25.4
QSBI(N)3-11-M1.1F	1.1	407	642	432	667	141	115	25.9	26.9
QSBI(N)3-12-M1.1F	1.1	425	660	450	685	141	115	26.3	27.2
QSBI(N)3-13-M1.1F	1.1	443	678	468	703	141	115	26.7	27.6
QSBI(N)3-15-M1.1F	1.1	479	714	504	739	141	115	27.4	28.3
QSBI(N)3-17-M1.5F	1.5	531	822	556	847	177	141	36.9	37.8
QSBI(N)3-19-M1.5F	1.5	567	858	592	883	177	141	37.6	38.5
QSBI(N)3-21-M2.2F	2.2	603	894	628	919	177	141	41.2	42.1
QSBI(N)3-23-M2.2F	2.2	639	930	664	955	177	141	41.9	42.9
QSBI(N)3-25-M2.2F	2.2	675	966	700	991	177	141	42.6	43.6
QSBI(N)3-27-M2.2F	2.2	711	1002	736	1027	177	141	43.4	44.3
QSBI(N)3-29-M2.2F	2.2	747	1038	772	1063	177	141	44.1	45.1
QSBI(N)3-31-M3.0F	3	787	1103	812	1128	197	147	52.0	53.0
QSBI(N)3-33-M3.0F	3	823	1139	848	1164	197	147	52.8	53.7
QSBI(N)3-36-M3.0F	3	877	1193	902	1218	197	147	53.9	54.8

EXPECTED PERFORMANCE CURVE

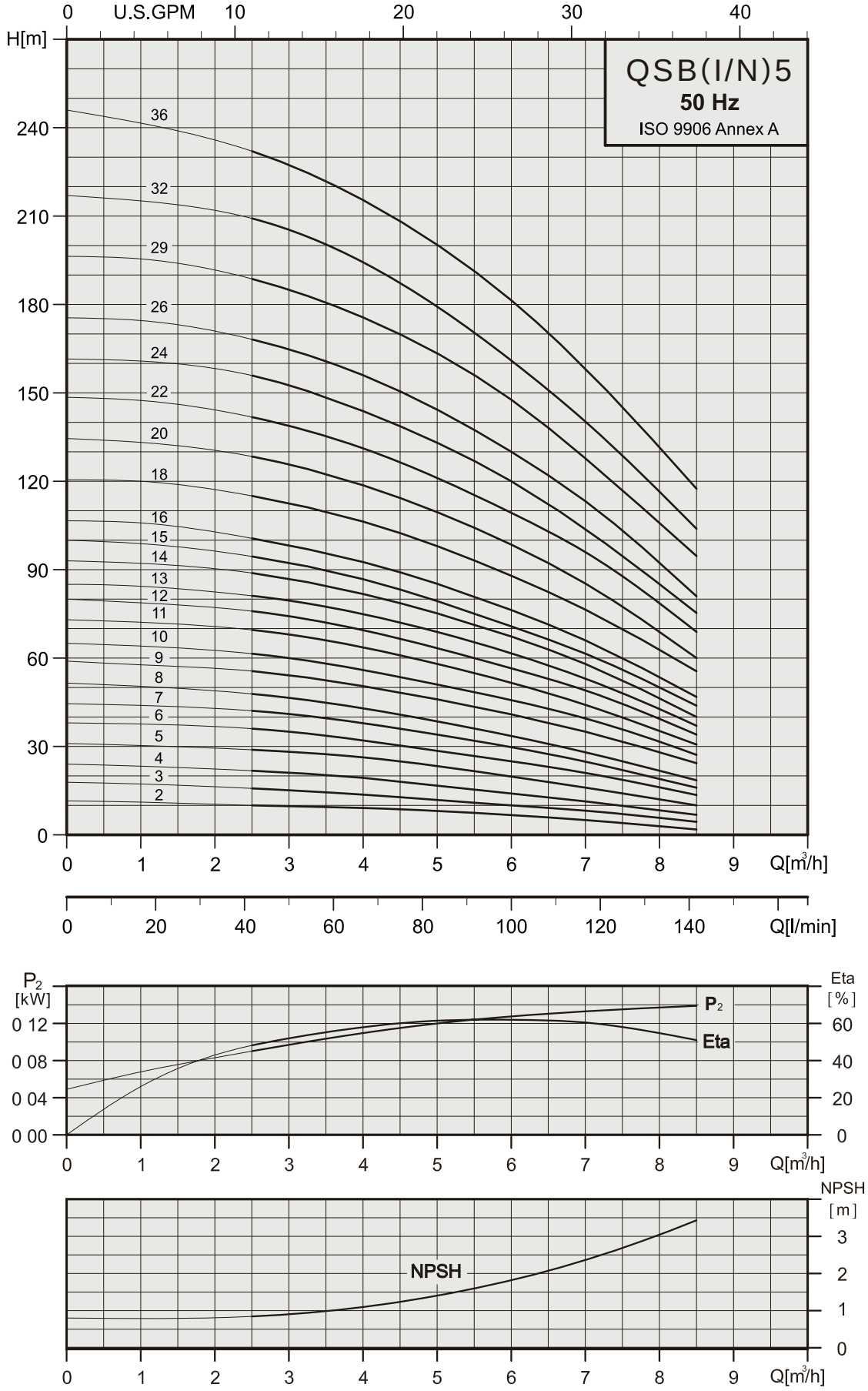

PUMP DIMENSION-QSB5

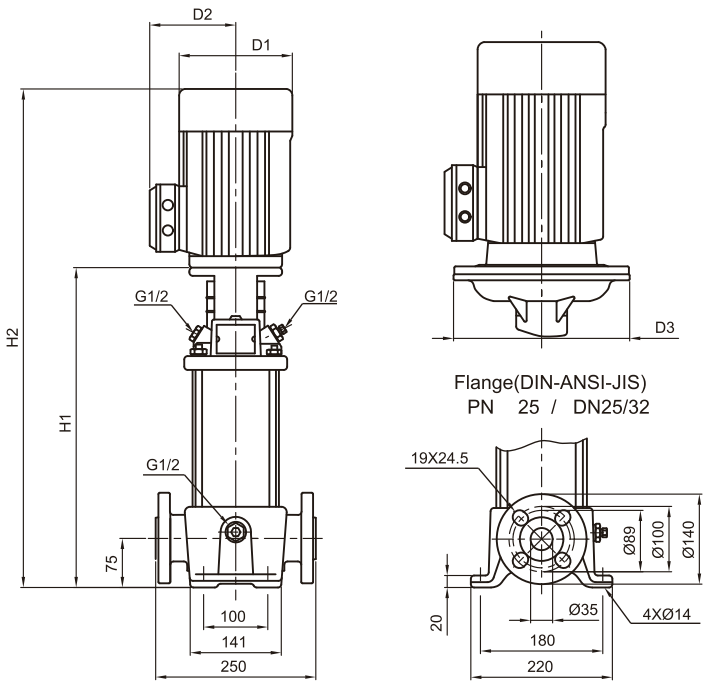

Pump type	Motor	QSB					
		Dimension[mm]					Net weight [kg]
	P_2	DIN flange		D1	D2	D3	
	[kW]	H1	H2				DIN flange
QSB5-2-M0.37F	0.37	279	474	141	115	—	23.3
QSB5-3-M0.55F	0.55	306	501	141	115	—	24.2
QSB5-4-M0.55F	0.55	333	528	141	115	—	24.8
QSB5-5-M0.75F	0.75	366	601	141	115	—	27.4
QSB5-6-M1.1F	1.1	393	628	141	115	—	29.1
QSB5-7-M1.1F	1.1	420	655	141	115	—	29.6
QSB5-8-M1.1F	1.1	447	682	141	115	—	30.1
QSB5-9-M1.5F	1.5	490	781	177	141	—	39.3
QSB5-10-M1.5F	1.5	517	808	177	141	—	39.9
QSB5-11-M2.2F	2.2	544	835	177	141	—	43.2
QSB5-12-M2.2F	2.2	571	862	177	141	—	43.7
QSB5-13-M2.2F	2.2	598	889	177	141	—	44.2
QSB5-14-M2.2F	2.2	625	916	177	141	—	44.8
QSB5-15-M2.2F	2.2	652	943	177	141	—	45.2
QSB5-16-M2.2F	2.2	679	970	177	141	—	45.8
QSB5-18-M3.0F	3	737	1053	197	147	—	54.3
QSB5-20-M3.0F	3	791	1107	197	147	—	55.5
QSB5-22-M4.0F	4	845	1171	220	161	—	59.8
QSB5-24-M4.0F	4	899	1225	220	161	—	60.8
QSB5-26-M4.0F	4	953	1279	220	161	—	62.7
QSB5-29-M4.0F	4	1034	1360	220	161	—	64.6
QSB5-32-M5.5F	5.5	1145	1507	235	197	300	90.1
QSB5-36-M5.5F	5.5	1253	1615	235	197	300	92.6

PUMP DIMENSION-QSBI, QSBN 5

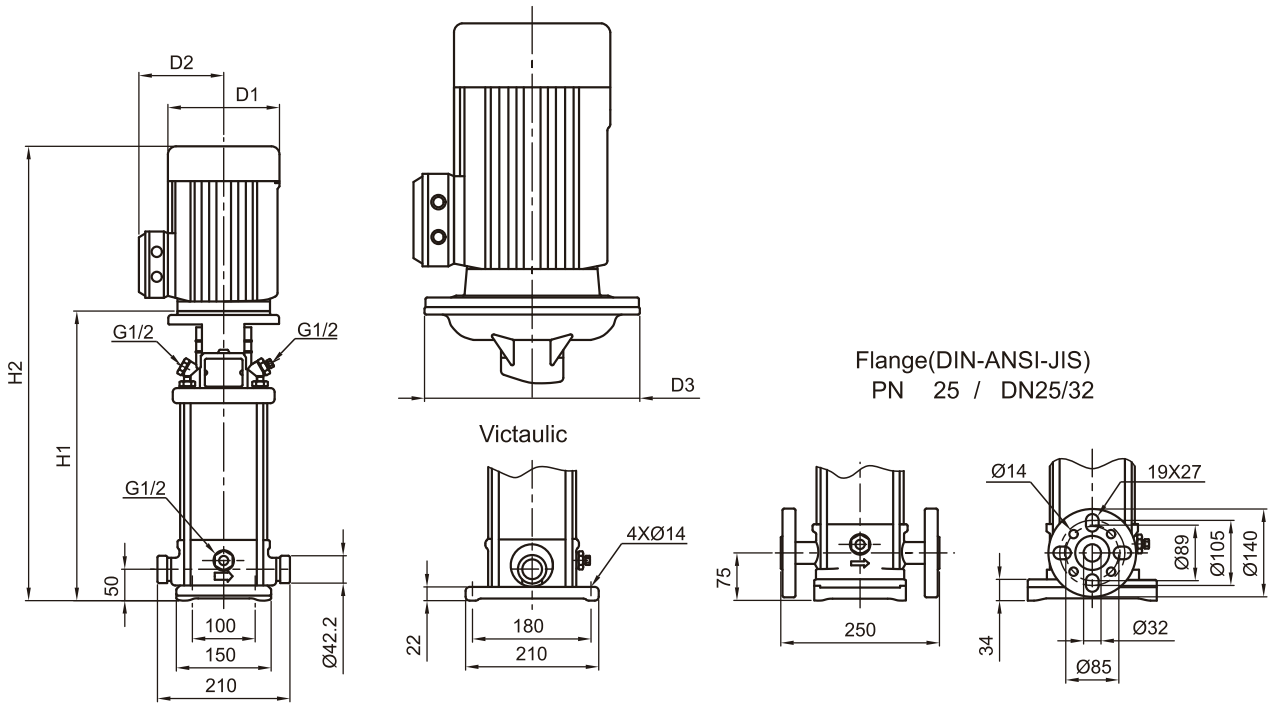

Pump type	Motor	QSBI, QSBN								
		Dimension [mm]							Net weight [kg]	
	P_2	Victaulic		DIN flange		D1	D2	D3	Victaulic	DIN flange
	[kW]	H1	H2	H1	H2					
QSBI(N)5-2-M0.37F	0.37	257	452	282	477	141	115	—	19.2	20.1
QSBI(N)5-3-M0.55F	0.55	284	479	309	504	141	115	—	20.3	21.2
QSBI(N)5-4-M0.55F	0.55	311	506	336	531	141	115	—	20.8	21.8
QSBI(N)5-5-M0.75F	0.75	344	579	369	604	141	115	—	23.4	24.3
QSBI(N)5-6-M1.1F	1.1	371	606	396	631	141	115	—	25.1	26.0
QSBI(N)5-7-M1.1F	1.1	398	633	423	658	141	115	—	25.6	26.5
QSBI(N)5-8-M1.1F	1.1	425	660	450	685	141	115	—	26.1	27.1
QSBI(N)5-9-M1.5F	1.5	468	759	493	784	177	141	—	35.4	36.4
QSBI(N)5-10-M1.5F	1.5	495	786	520	811	177	141	—	36.0	36.9
QSBI(N)5-11-M2.2F	2.2	522	813	547	838	177	141	—	39.3	40.3
QSBI(N)5-12-M2.2F	2.2	549	840	574	865	177	141	—	39.9	40.8
QSBI(N)5-13-M2.2F	2.2	576	867	601	892	177	141	—	40.4	41.4
QSBI(N)5-14-M2.2F	2.2	603	894	628	919	177	141	—	41.0	41.9
QSBI(N)5-15-M2.2F	2.2	630	921	655	946	177	141	—	41.5	42.5
QSBI(N)5-16-M2.2F	2.2	657	948	682	973	177	141	—	42.1	43.0
QSBI(N)5-18-M3.0F	3	715	1031	740	1056	197	147	—	50.3	51.3
QSBI(N)5-20-M3.0F	3	769	1085	794	1110	197	147	—	51.6	52.5
QSBI(N)5-22-M4.0F	4	823	1149	848	1174	220	161	—	55.8	56.8
QSBI(N)5-24-M4.0F	4	877	1203	902	1228	220	161	—	56.9	57.8
QSBI(N)5-26-M4.0F	4	931	1257	956	1282	220	161	—	58.0	58.9
QSBI(N)5-29-M4.0F	4	1012	1338	1037	1363	220	161	—	59.7	60.6
QSBI(N)5-32-M5.5F	5.5	1123	1485	1148	1510	235	197	300	84.9	85.8
QSBI(N)5-36-M5.5F	5.5	1231	1593	1256	1618	235	197	300	87.1	88.1

EXPECTED PERFORMANCE CURVE

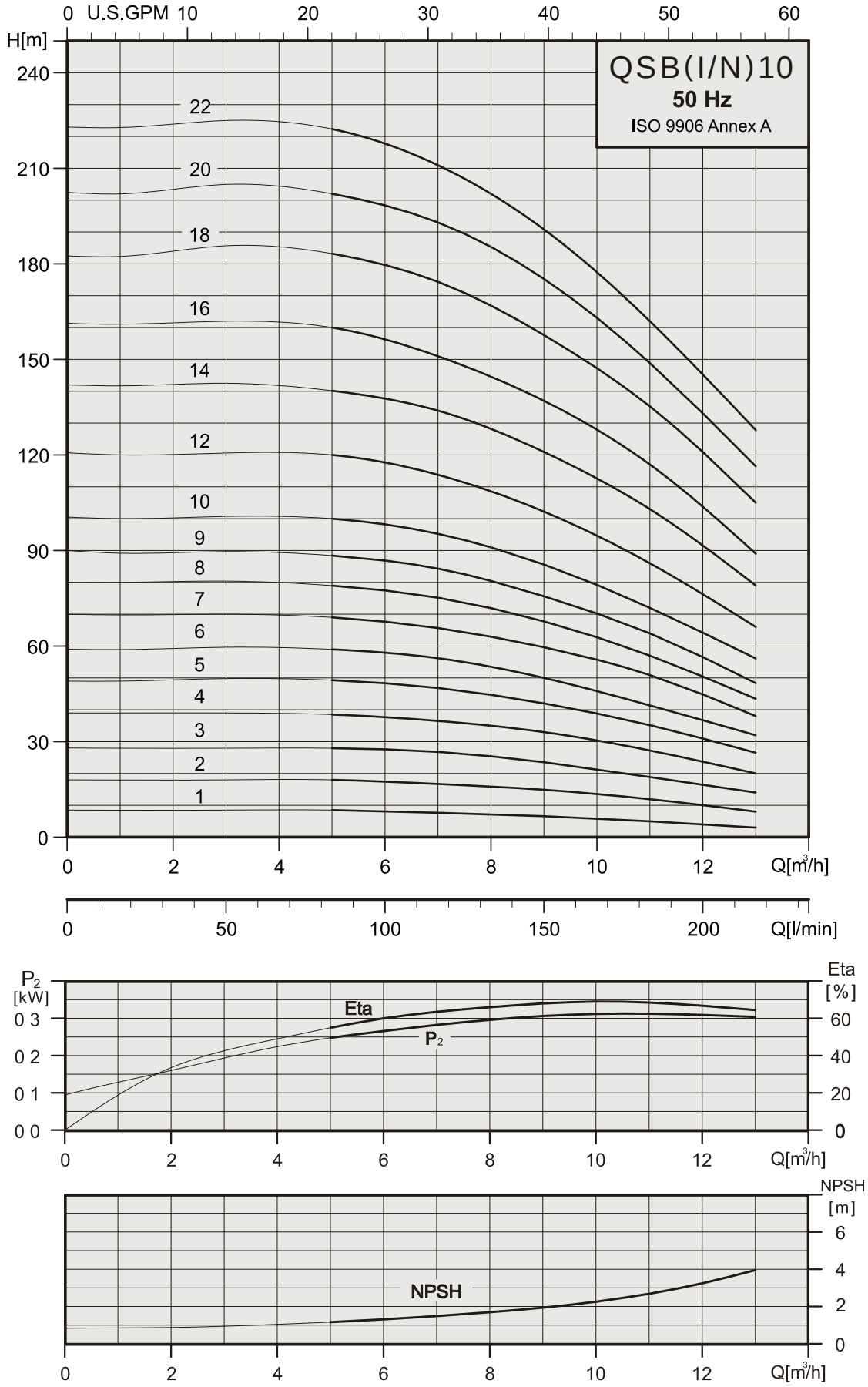

PUMP DIMENSION-QSB 10

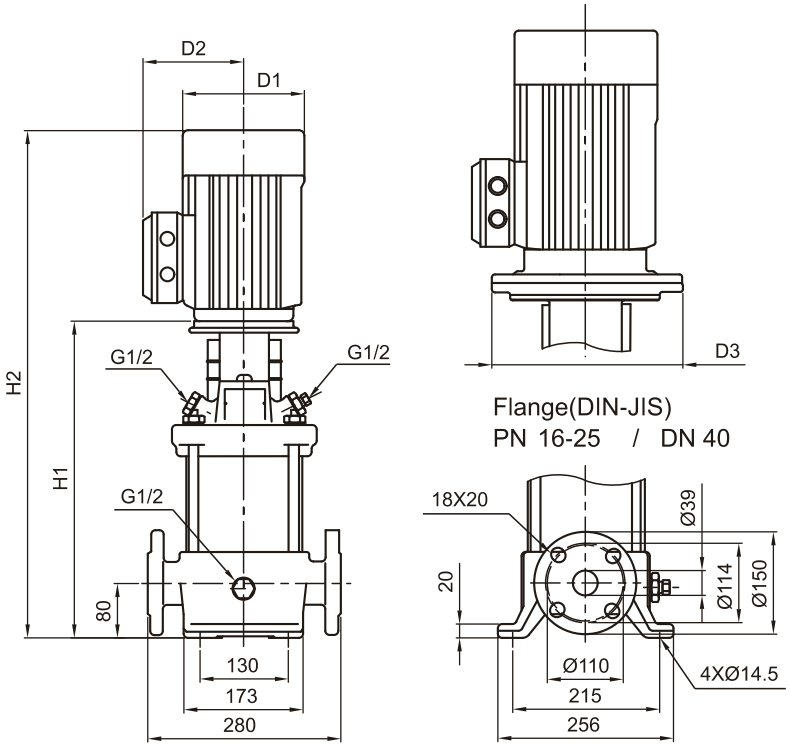

Pump type	Motor	QSB					
		Dimension[mm]					Net weight [kg]
	P_2	DIN flange		D1	D2	D3	
	[kW]	H1	H2				DIN flange
QSB10-1-M0.37F	0.37	343	538	141	115	—	35.9
QSB10-2-M0.75F	0.75	347	582	141	115	—	38.2
QSB10-3-M1.1F	1.1	377	612	141	115	—	40.3
QSB10-4-M1.5F	1.5	423	714	177	141	—	50.1
QSB10-5-M2.2F	2.2	453	744	177	141	—	53.9
QSB10-6-M2.2F	2.2	483	774	177	141	—	55.0
QSB10-7-M3.0F	3	518	834	197	147	—	63.8
QSB10-8-M3.0F	3	548	864	197	147	—	64.9
QSB10-9-M3.0F	3	578	894	197	147	—	65.9
QSB10-10-M4.0F	4	608	934	220	161	—	70.3
QSB10-12-M4.0F	4	668	994	220	161	—	72.4
QSB10-14-M5.5F	5.5	760	1122	235	197	300	104.1
QSB10-16-M5.5F	5.5	820	1182	235	197	300	106.2
QSB10-18-M7.5F	7.5	880	1278	235	197	300	113.6
QSB10-20-M7.5F	7.5	940	1338	235	197	300	116.7
QSB10-22-M7.5F	7.5	1000	1398	235	197	300	118.8

PUMP DIMENSION-QSBI, QSBN 10

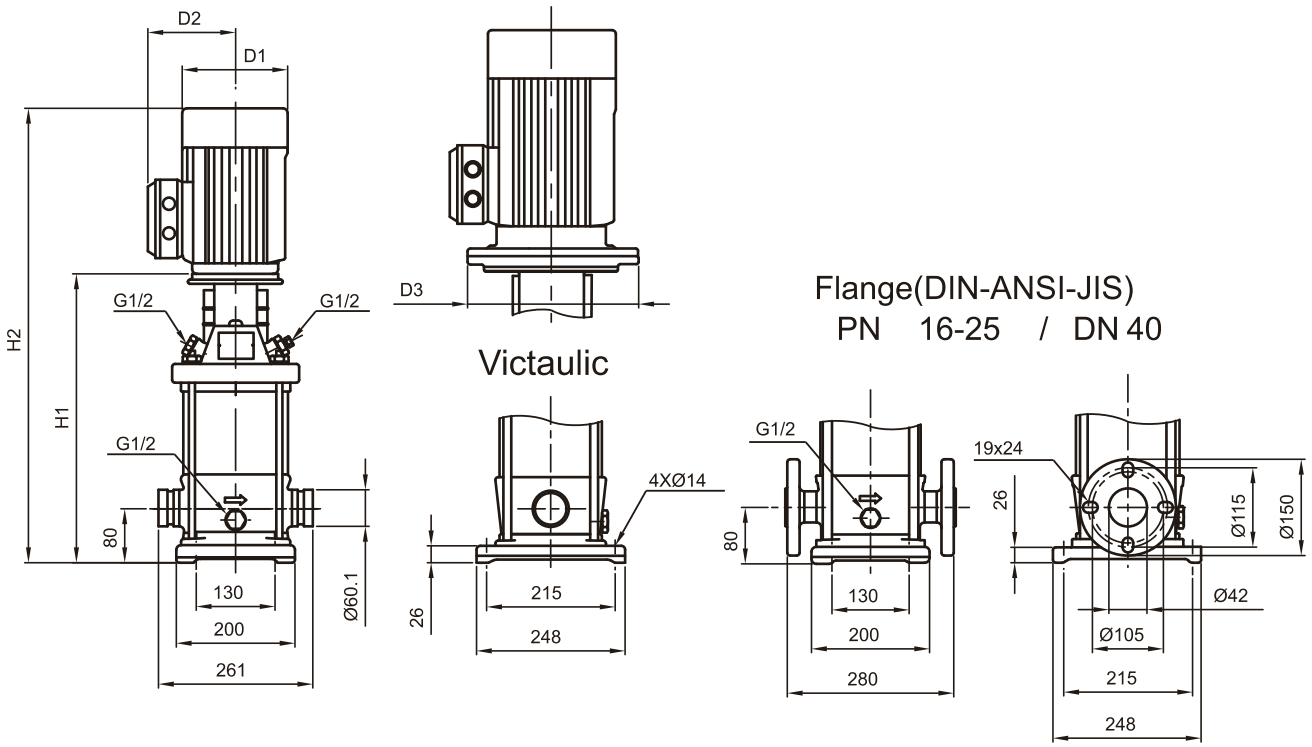

Pump type	Motor	QSBI, QSBN								
		Dimension [mm]							Net weight [kg]	
	P_2	Victaulic		DIN flange		D1	D2	D3	Victaulic	DIN flange
	[kW]	H1	H2	H1	H2					
QSBI(N)10-1-M0.37F	0.37	353	548	353	548	141	115	—	31.6	31.4
QSBI(N)10-2-M0.75F	0.75	357	592	357	592	141	115	—	34.3	34.2
QSBI(N)10-3-M1.1F	1.1	387	622	387	622	141	115	—	36.4	36.3
QSBI(N)10-4-M1.5F	1.5	433	724	433	724	177	141	—	46.1	46.0
QSBI(N)10-5-M2.2F	2.2	463	754	463	754	177	141	—	50.0	49.8
QSBI(N)10-6-M2.2F	2.2	493	784	493	784	177	141	—	51.0	50.8
QSBI(N)10-7-M3.0F	3	528	844	528	844	197	147	—	59.1	58.9
QSBI(N)10-8-M3.0F	3	558	874	558	874	197	147	—	60.1	60.0
QSBI(N)10-9-M3.0F	3	588	904	588	904	197	147	—	61.1	61.0
QSBI(N)10-10-M4.0F	4	618	944	618	944	220	161	—	65.6	65.4
QSBI(N)10-12-M4.0F	4	678	1004	678	1004	220	161	—	67.6	67.5
QSBI(N)10-14-M5.5F	5.5	770	1132	770	1132	235	197	300	100.4	100.3
QSBI(N)10-16-M5.5F	5.5	830	1192	830	1192	235	197	300	102.5	102.4
QSBI(N)10-18-M7.5F	7.5	890	1288	890	1288	235	197	300	110.9	110.8
QSBI(N)10-20-M7.5F	7.5	950	1348	950	1348	235	197	300	113.0	112.8
QSBI(N)10-22-M7.5F	7.5	1010	1408	1010	1408	235	197	300	115.1	114.9

EXPECTED PERFORMANCE CURVE

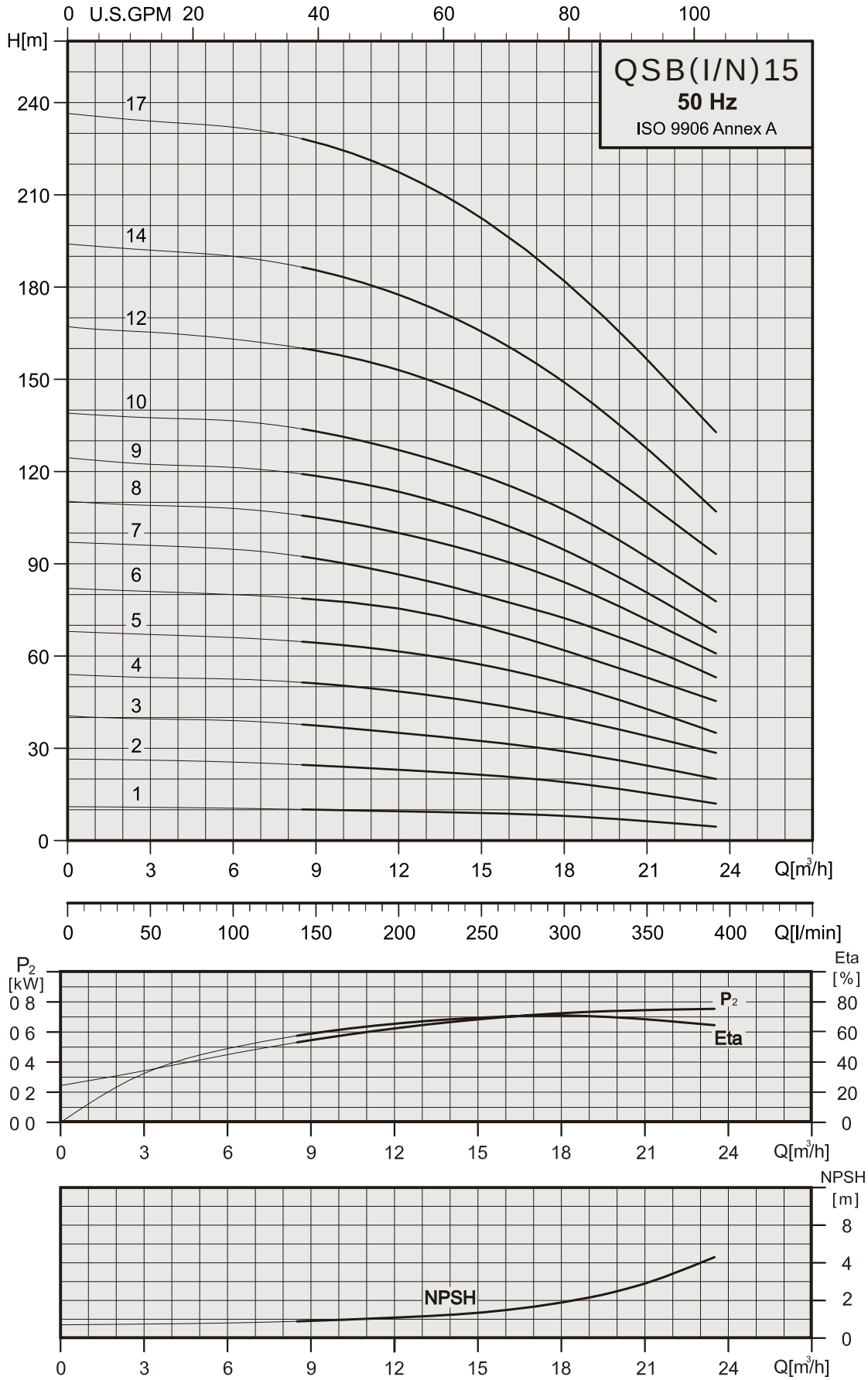

PUMP DIMENSION-QSB 15

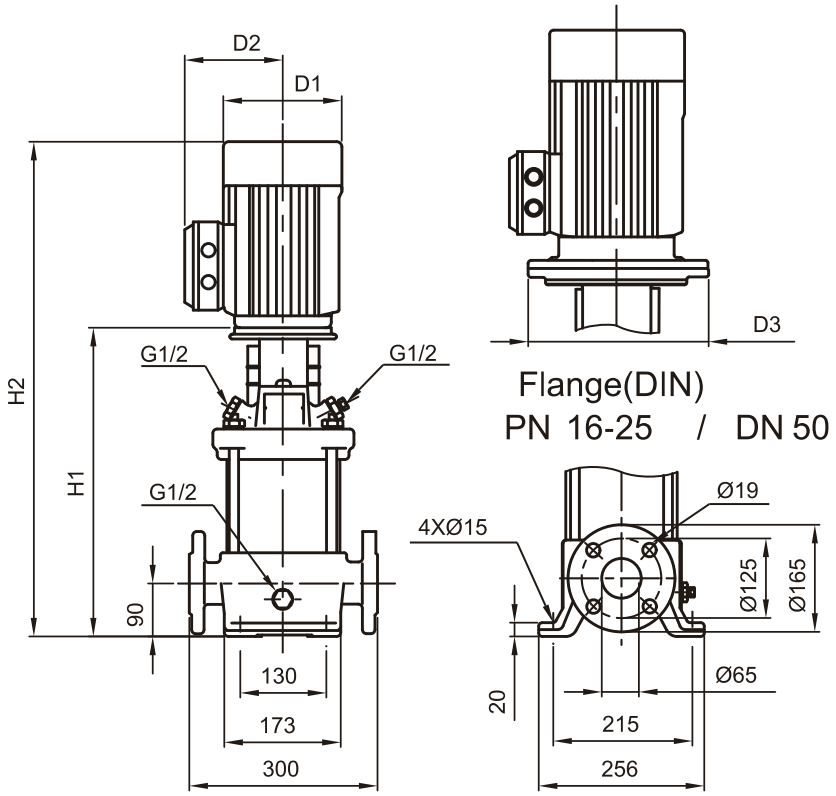

Pump type	Motor	QSB					
		Dimension[mm]					Net weight [kg]
	P_2	DIN flange		D1	D2	D3	
	[kW]	H1	H2				DIN flange
QSB15-1-M1.1F	1.1	400	635	141	115	—	43.8
QSB15-2-M2.2F	2.2	415	706	177	141	—	55.7
QSB15-3-M3.0F	3	465	781	197	147	—	64.9
QSB15-4-M4.0F	4	510	836	220	161	—	69.7
QSB15-5-M4.0F	4	555	881	220	161	—	71.2
QSB15-6-M5.5F	5.5	632	994	235	197	300	102.3
QSB15-7-M5.5F	5.5	677	1039	235	197	300	103.8
QSB15-8-M7.5F	7.5	722	1120	235	197	300	111.8
QSB15-9-M7.5F	7.5	767	1165	235	197	300	113.3
QSB15-10-M11F	11	889	1394	318	245	350	151.0
QSB15-12-M11F	11	979	1484	318	245	350	154.0
QSB15-14-M11F	11	1069	1574	318	245	350	157.3
QSB15-17-M15F	15	1204	1714	318	245	350	172.4

PUMP DIMENSION-QSBI, QSBN 15

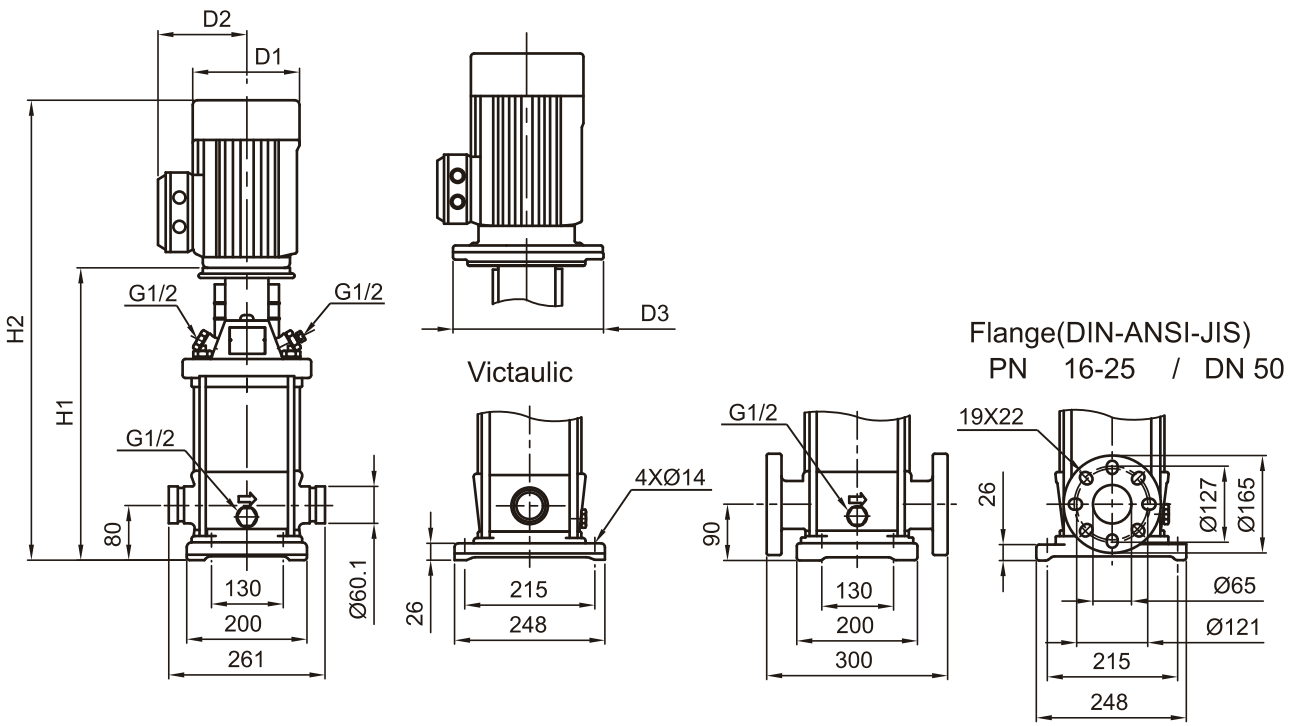

Pump type	Motor	QSBI, QSBN								
		Dimension [mm]							Net weight [kg]	
	P_2	Victaulic		DIN flange		D1	D2	D3	Victaulic	DIN flange
	[kW]	H1	H2	H1	H2					
QSBI(N)15-1-M1.1F	1.1	387	622	397	632	141	115	—	36.0	36.6
QSBI(N)15-2-M2.2F	2.2	403	694	413	704	177	141	—	47.7	48.3
QSBI(N)15-3-M3.0F	3	453	769	463	779	197	147	—	56.1	56.7
QSBI(N)15-4-M4.0F	4	498	824	508	834	220	161	—	61.0	61.6
QSBI(N)15-5-M4.0F	4	543	869	553	879	220	161	—	62.4	63.0
QSBI(N)15-6-M5.5F	5.5	620	982	630	992	235	197	300	94.6	95.3
QSBI(N)15-7-M5.5F	5.5	665	1027	675	1037	235	197	300	96.1	96.7
QSBI(N)15-8-M7.5F	7.5	710	1108	720	1118	235	197	300	104.1	104.7
QSBI(N)15-9-M7.5F	7.5	755	1153	765	1163	235	197	300	105.6	106.2
QSBI(N)15-10-M11F	11	877	1382	887	1392	318	245	350	143.7	144.3
QSBI(N)15-12-M11F	11	967	1472	977	1482	318	245	350	146.5	147.2
QSBI(N)15-14-M11F	11	1057	1562	1067	1572	318	245	350	149.5	150.1
QSBI(N)15-17-M15F	15	1192	1702	1202	1712	318	245	350	163.8	164.4

EXPECTED PERFORMANCE CURVE

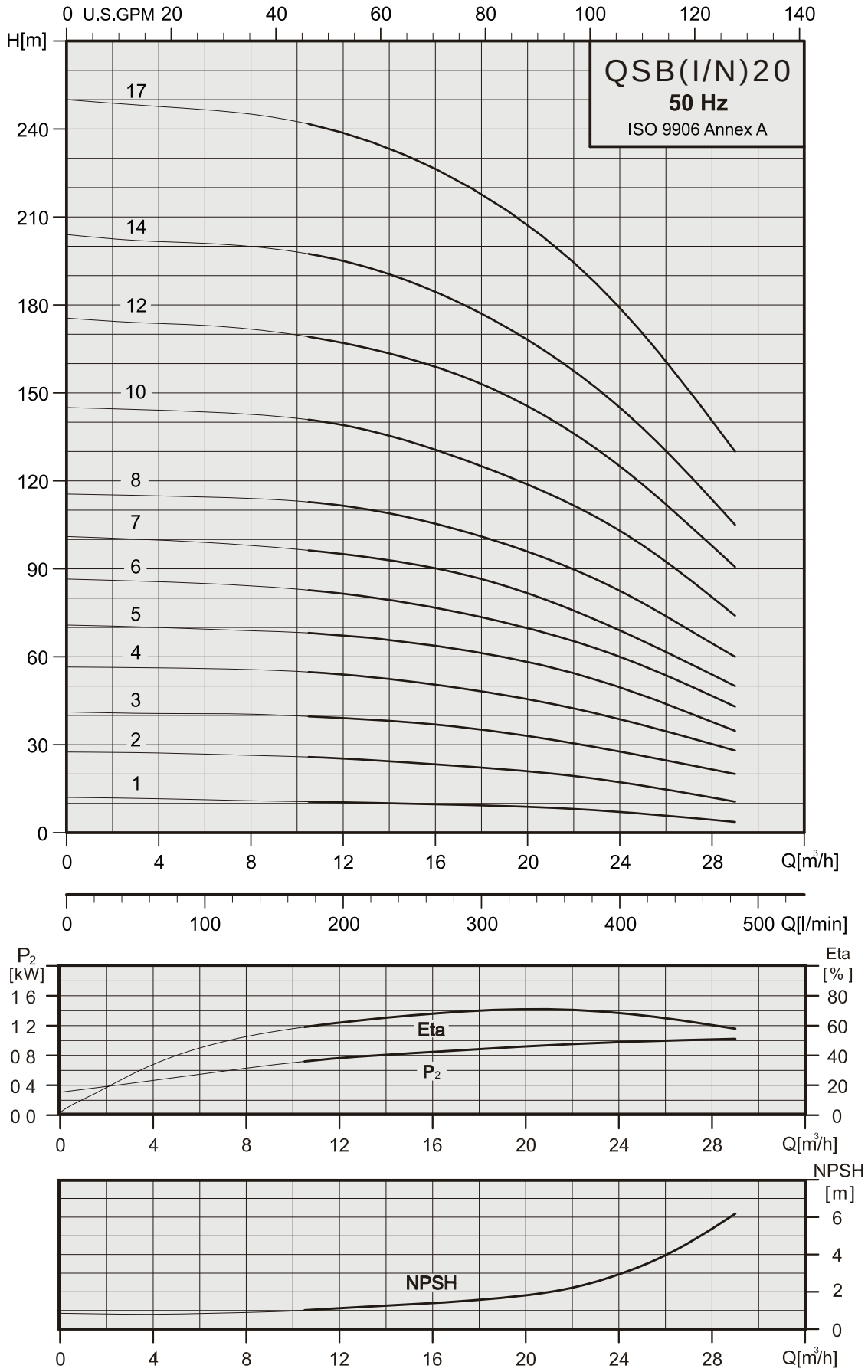

PUMP DIMENSION-QSB 20

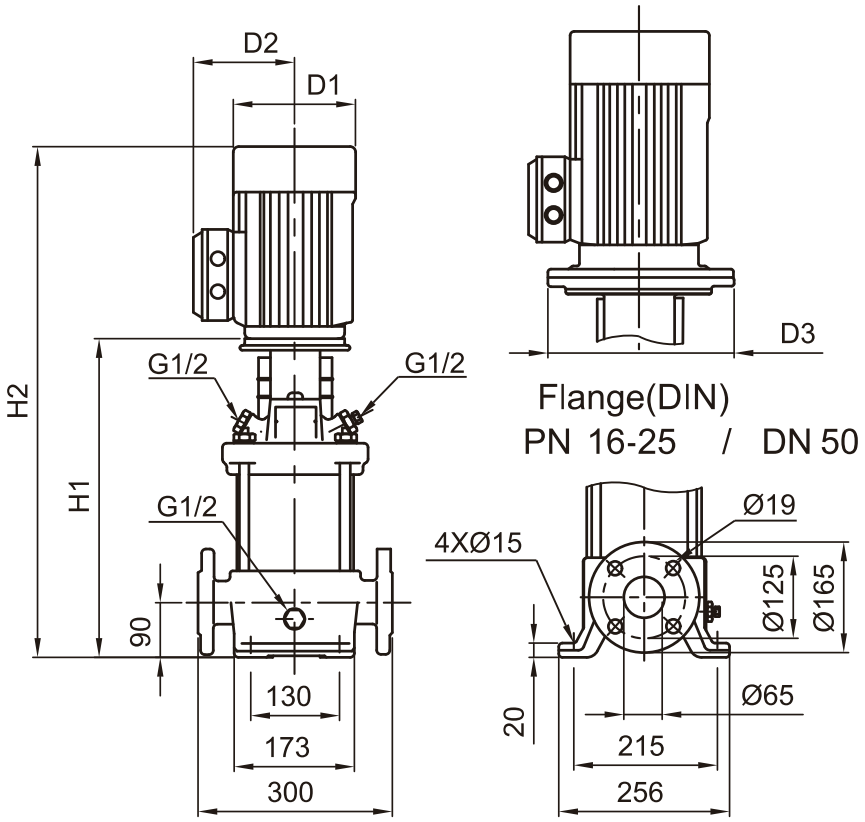

Pump type	Motor	QSB					
		Dimension[mm]					Net weight [kg]
	P_2	DIN flange		D1	D2	D3	
	[kW]	H1	H2				DIN flange
QSB20-1-M1.1F	1.1	400	636	141	115	—	43.9
QSB20-2-M2.2F	2.2	415	708	177	141	—	55.7
QSB20-3-M4.0F	4	465	795	220	161	—	68.3
QSB20-4-M5.5F	5.5	542	910	235	197	300	99.4
QSB20-5-M5.5F	5.5	587	955	235	197	300	100.8
QSB20-6-M7.5F	7.5	632	1038	235	197	300	108.6
QSB20-7-M7.5F	7.5	677	1083	235	197	300	110.1
QSB20-8-M11F	11	799	1315	318	245	350	148.1
QSB20-10-M11F	11	889	1405	318	245	350	151.0
QSB20-12-M15F	15	979	1504	318	245	350	164.0
QSB20-14-M15F	15	1069	1594	318	245	350	166.9
QSB20-17-M18.5F	18.5	1204	1773	318	245	350	195.4

PUMP DIMENSION-QSBI, QSBN 20

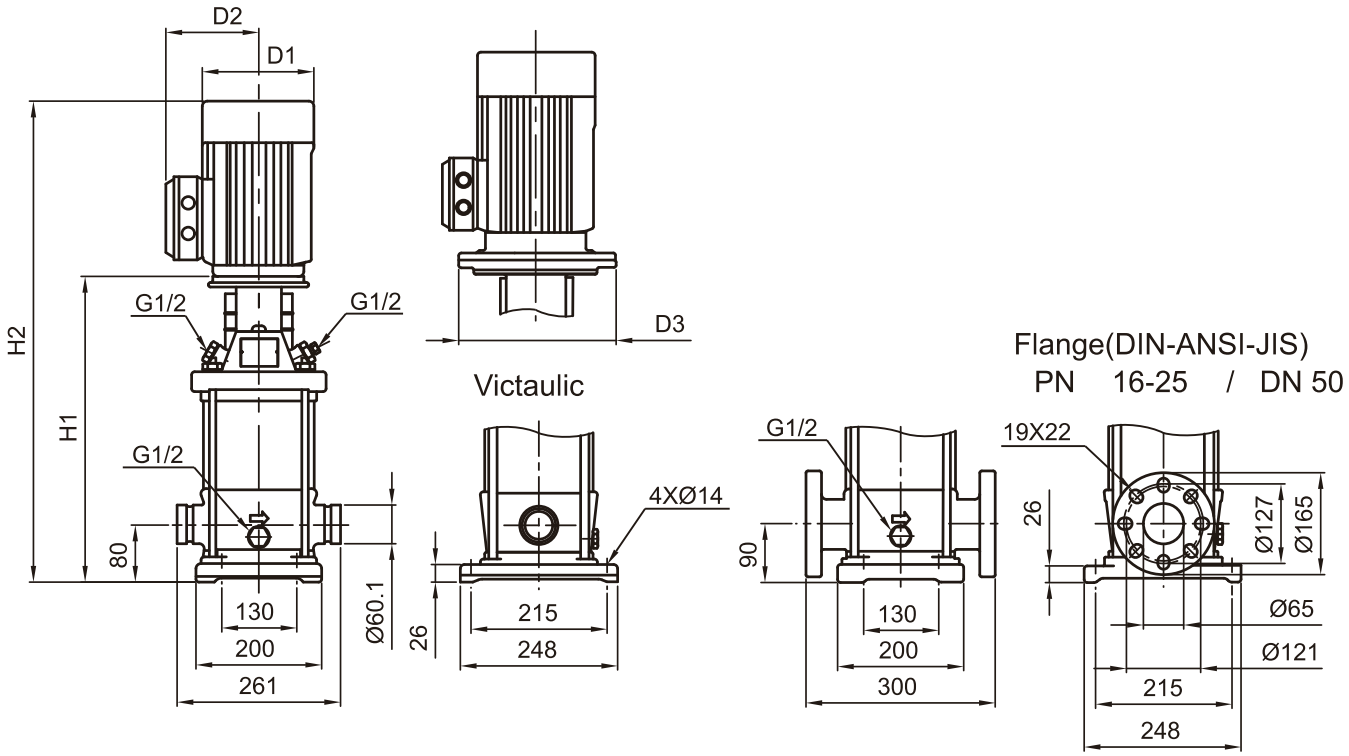

Pump type	Motor	QSBI, QSBN								
		Dimension [mm]							Net weight [kg]	
	P_2	Victaulic		DIN flange		D1	D2	D3	Victaulic	DIN flange
	[kW]	H1	H2	H1	H2					
QSBI(N)20-1-M1.1F	1.1	387	623	397	632	141	115	—	36.0	36.6
QSBI(N)20-2-M2.2F	2.2	403	696	413	704	177	141	—	47.7	48.3
QSBI(N)20-3-M4.0F	4	453	783	463	789	220	161	—	59.5	60.2
QSBI(N)20-4-M5.5F	5.5	530	898	540	902	235	197	300	91.7	92.3
QSBI(N)20-5-M5.5F	5.5	575	943	585	947	235	197	300	93.2	93.8
QSBI(N)20-6-M7.5F	7.5	620	1026	630	1028	235	197	300	100.9	101.6
QSBI(N)20-7-M7.5F	7.5	665	1071	675	1073	235	197	300	102.4	103.0
QSBI(N)20-8-M11F	11	787	1303	797	1302	318	245	350	140.7	141.3
QSBI(N)20-10-M11F	11	877	1393	887	1392	318	245	350	143.7	144.3
QSBI(N)20-12-M15F	15	967	1492	977	1487	318	245	350	156.6	157.2
QSBI(N)20-14-M15F	15	1057	1582	1067	1577	318	245	350	159.5	160.1
QSBI(N)20-17-M18.5F	18.5	1192	1761	1202	1752	318	245	350	187.8	188.5

EXPECTED PERFORMANCE CURVE

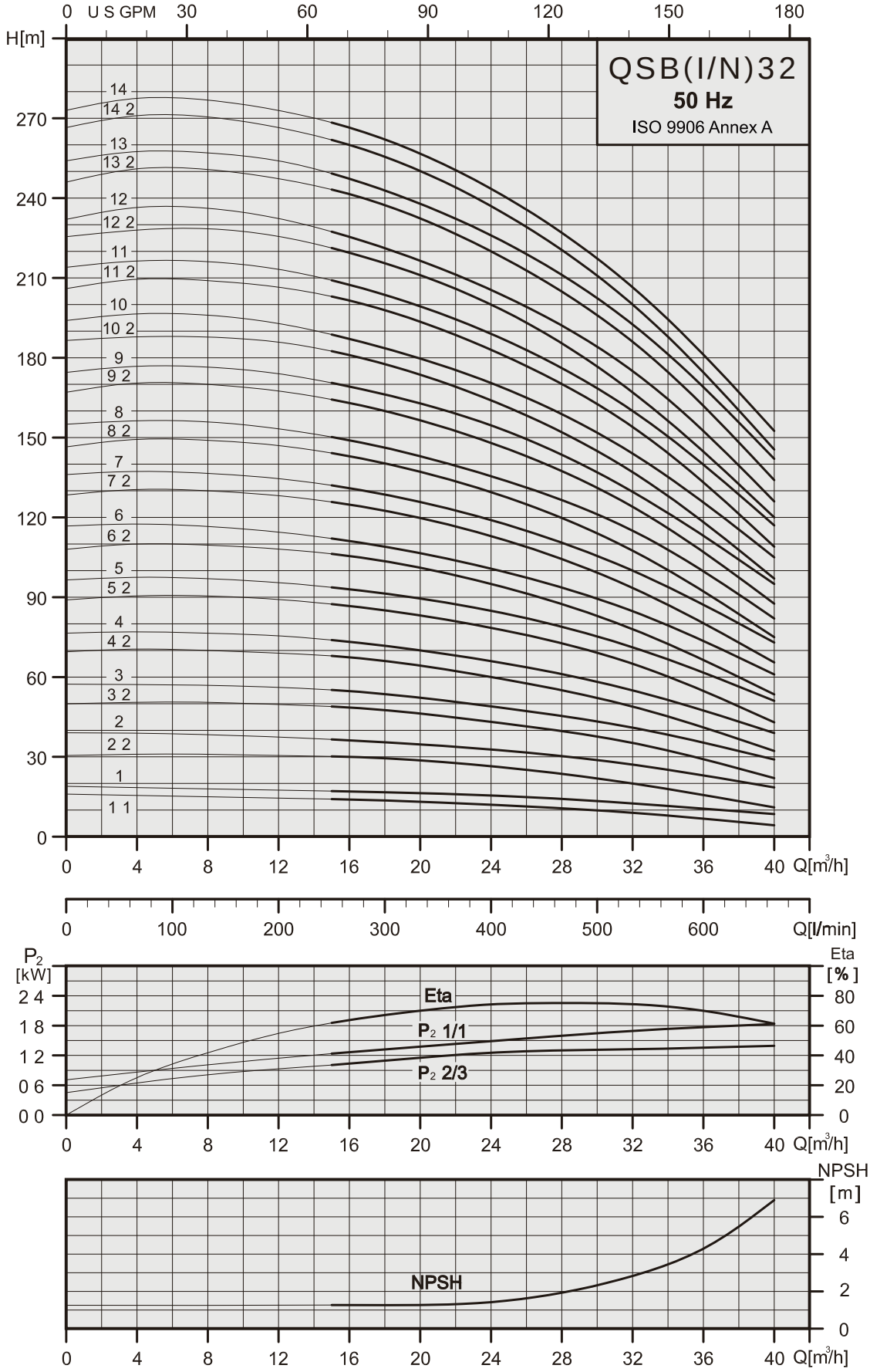

PUMP DIMENSION-QSB 32

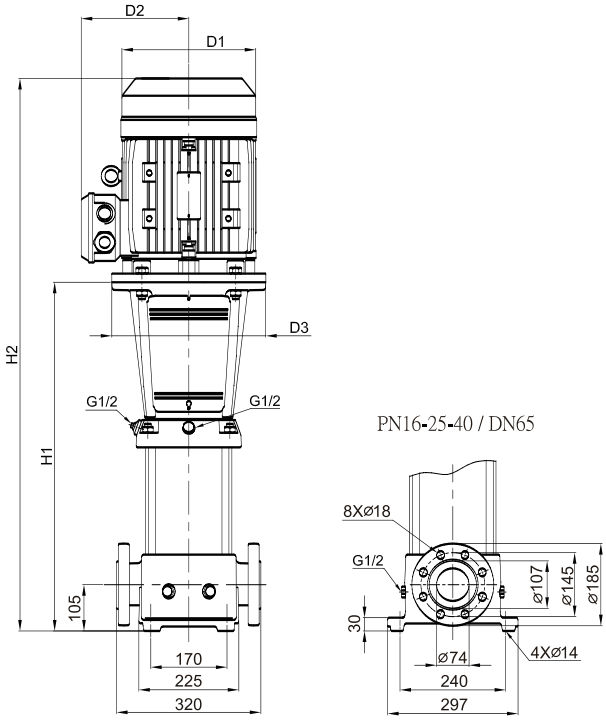

Pump type	Motor	QSB					
		Dimension[mm]					Net weight [kg]
	P_2	DIN flange		D1	D2	D3	
	[kW]	H1	H2				DIN flange
QSB32-1-1-M1.5F	1.5	504	795	177	141	280	71.5
QSB32-1-M2.2F	2.2	504	795	177	141	280	74.3
QSB32-2-2-M3.0F	3	574	935	197	147	280	84.2
QSB32-2-M4.0F	4	574	900	220	161	280	87.6
QSB32-3-2-M5.5F	5.5	644	1006	235	197	300	110.2
QSB32-3-M5.5F	5.5	644	1006	235	197	300	110.2
QSB32-4-2-M7.5F	7.5	714	1112	235	197	300	119.5
QSB32-4-M7.5F	7.5	714	1112	235	197	300	119.5
QSB32-5-2-M11F	11	894	1399	318	245	350	164.3
QSB32-5-M11F	11	894	1399	318	245	350	164.3
QSB32-6-2-M11F	11	964	1469	318	245	350	167.3
QSB32-6-M11F	11	964	1469	318	245	350	167.3
QSB32-7-2-M15F	15	1034	1544	318	245	350	180.4
QSB32-7-M15F	15	1034	1544	318	245	350	180.4
QSB32-8-2-M15F	15	1104	1614	318	245	350	183.5
QSB32-8-M15F	15	1104	1614	318	245	350	183.5
QSB32-9-2-M18.5F	18.5	1174	1724	318	245	350	210.6
QSB32-9-M18.5F	18.5	1174	1724	318	245	350	210.6
QSB32-10-2-M18.5F	18.5	1244	1794	318	245	350	212.7
QSB32-10-M18.5F	18.5	1244	1794	318	245	350	213.7
QSB32-11-2-M22F	22	1314	1894	358	265	350	258.8
QSB32-11-M22F	22	1314	1894	358	265	350	258.8
QSB32-12-2-M22F	22	1384	1964	358	265	350	260.8
QSB32-12-M22F	22	1384	1964	358	265	350	260.8
QSB32-13-2-M30F	30	1454	2114	420	295	400	348.2
QSB32-13-M30F	30	1454	2114	420	295	400	348.2
QSB32-14-2-M30F	30	1524	2184	420	295	400	351.3
QSB32-14-M30F	30	1524	2184	420	295	400	351.3

PUMP DIMENSION-QSBI, QSBN 32

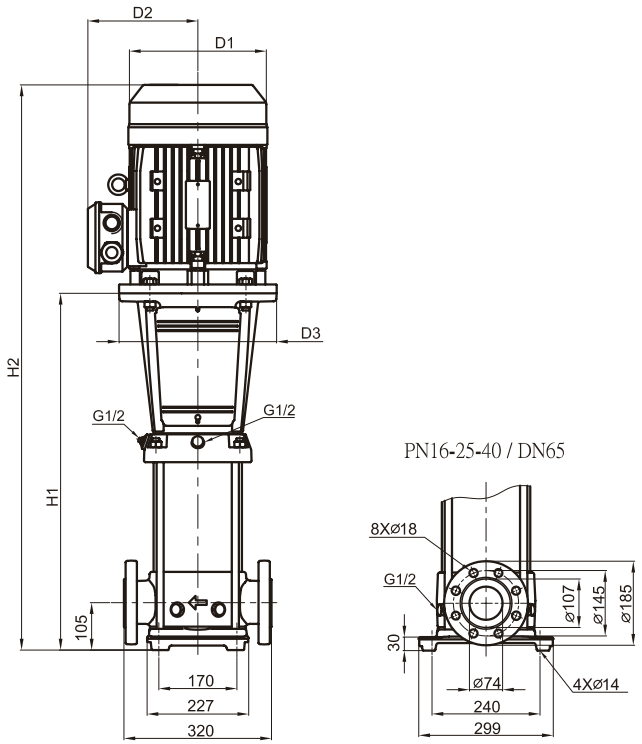

Pump type	Motor	QSBI, QSBN					
		Dimension[mm]					Net weight [kg]
	P_2	DIN flange		D1	D2	D3	
	[kW]	H1	H2				DIN flange
QSBI(N)32-1-1-M1.5F	1.5	504	795	177	141	280	66.5
QSBI(N)32-1-M2.2F	2.2	504	795	177	141	280	69.3
QSBI(N)32-2-2-M3.0F	3	574	935	197	147	280	79.1
QSBI(N)32-2-M4.0F	4	574	900	220	161	280	82.5
QSBI(N)32-3-2-M5.5F	5.5	644	1006	235	197	300	105.1
QSBI(N)32-3-M5.5F	5.5	644	1006	235	197	300	105.1
QSBI(N)32-4-2-M7.5F	7.5	714	1112	235	197	300	114.5
QSBI(N)32-4-M7.5F	7.5	714	1112	235	197	300	114.6
QSBI(N)32-5-2-M11F	11	894	1399	318	245	350	159.2
QSBI(N)32-5-M11F	11	894	1399	318	245	350	159.3
QSBI(N)32-6-2-M11F	11	964	1469	318	245	350	162.3
QSBI(N)32-6-M11F	11	964	1469	318	245	350	162.4
QSBI(N)32-7-2-M15F	15	1034	1544	318	245	350	175.5
QSBI(N)32-7-M15F	15	1034	1544	318	245	350	175.5
QSBI(N)32-8-2-M15F	15	1104	1614	318	245	350	178.8
QSBI(N)32-8-M15F	15	1104	1614	318	245	350	178.8
QSBI(N)32-9-2-M18.5F	18.5	1174	1724	318	245	350	205.5
QSBI(N)32-9-M18.5F	18.5	1174	1724	318	245	350	205.6
QSBI(N)32-10-2-M18.5F	18.5	1244	1794	318	245	350	208.1
QSBI(N)32-10-M18.5F	18.5	1244	1794	318	245	350	208.2
QSBI(N)32-11-2-M22F	22	1314	1894	358	265	350	253.6
QSBI(N)32-11-M22F	22	1314	1894	358	265	350	253.6
QSBI(N)32-12-2-M22F	22	1384	1964	358	265	350	256.3
QSBI(N)32-12-M22F	22	1384	1964	358	265	350	256.3
QSBI(N)32-13-2-M30F	30	1454	2114	420	295	400	343.6
QSBI(N)32-13-M30F	30	1454	2114	420	295	400	343.6
QSBI(N)32-14-2-M30F	30	1524	2184	420	295	400	346.3
QSBI(N)32-14-M30F	30	1524	2184	420	295	400	346.3

EXPECTED PERFORMANCE CURVE

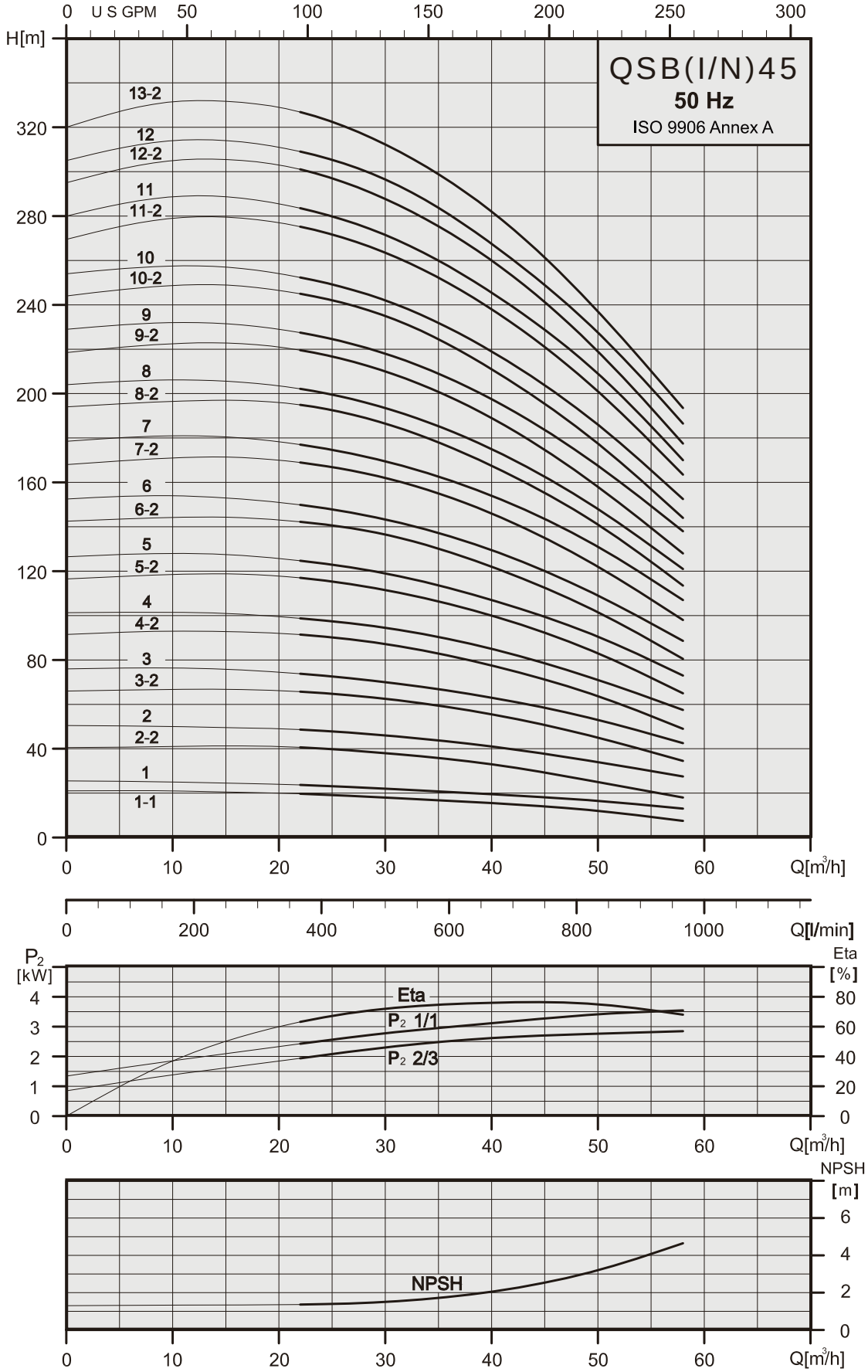

PUMP DIMENSION-QSB 45

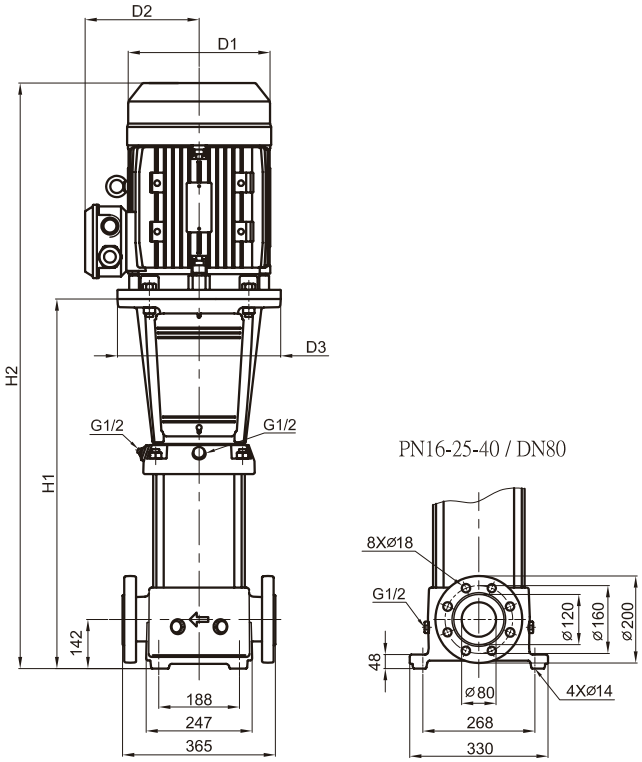

Pump type	Motor	QSB					
		Dimension[mm]					Net weight [kg]
	P_2	DIN flange		D1	D2	D3	
	[kW]	H1	H2				DIN flange
QSB45-1-1-M3.0F	3	561	877	197	147	280	91.7
QSB45-1-M4.0F	4	561	887	220	161	280	95.1
QSB45-2-2-M5.5F	5.5	641	1003	235	197	300	118.3
QSB45-2-M7.5F	7.5	641	1039	235	197	300	124.6
QSB45-3-2-M11F	11	831	1336	318	245	350	170.0
QSB45-3-M11F	11	831	1336	318	245	350	170.0
QSB45-4-2-M15F	15	911	1421	318	245	350	183.8
QSB45-4-M15F	15	911	1421	318	245	350	183.8
QSB45-5-2-M18.5F	18.5	991	1541	318	245	350	211.6
QSB45-5-M18.5F	18.5	991	1541	318	245	350	211.6
QSB45-6-2-M22F	22	1071	1651	358	265	350	258.1
QSB45-6-M22F	22	1071	1651	358	265	350	258.1
QSB45-7-2-M30F	30	1151	1811	420	295	400	346.4
QSB45-7-M30F	30	1151	1811	420	295	400	346.5
QSB45-8-2-M30F	30	1231	1891	420	295	400	350.2
QSB45-8-M30F	30	1231	1891	420	295	400	351.3
QSB45-9-2-M30F	30	1311	1971	420	295	400	354.0
QSB45-9-M37F	37	1311	1971	420	295	400	375.0
QSB45-10-2-M37F	37	1391	2051	420	295	400	378.7
QSB45-10-M37F	37	1391	2051	420	295	400	378.7
QSB45-11-2-M45F	45	1471	2161	470	325	450	430.5
QSB45-11-M45F	45	1471	2161	470	325	450	430.5
QSB45-12-2-M45F	45	1551	2241	470	325	450	434.2
QSB45-12-M45F	45	1551	2241	470	325	450	434.2
QSB45-13-2-M45F	45	1631	2321	470	325	450	437.9

PUMP DIMENSION-QSBI, QSBN 45

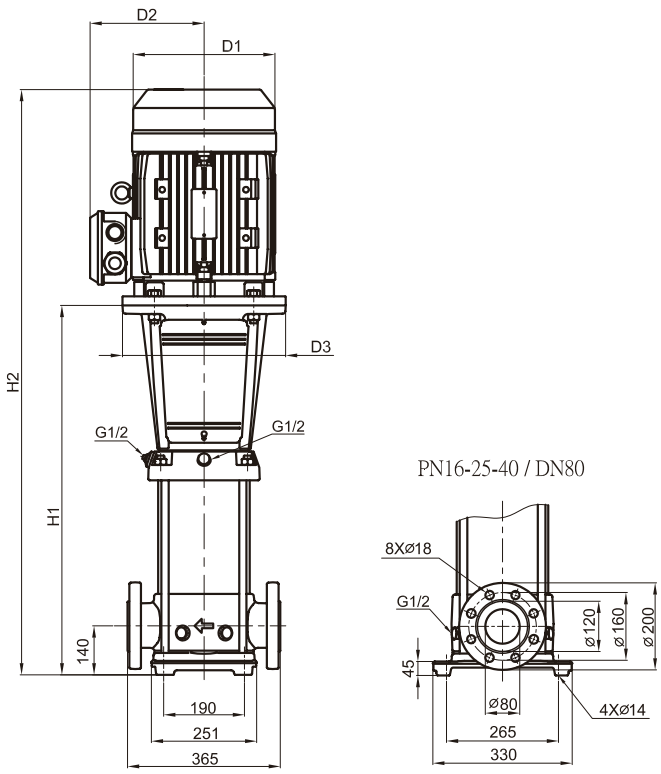

Pump type	Motor	QSBI, QSBN					
		Dimension[mm]					Net weight [kg]
	P_2	DIN flange		D1	D2	D3	
	[kW]	H1	H2				DIN flange
QSBI(N)45-1-1-M3.0F	3	559	875	197	147	280	82.9
QSBI(N)45-1-M4.0F	4	559	885	220	161	280	86.3
QSBI(N)45-2-2-M5.5F	5.5	639	1001	235	197	300	109.5
QSBI(N)45-2-M7.5F	7.5	639	1037	235	197	300	115.8
QSBI(N)45-3-2-M11F	11	829	1334	318	245	350	161.2
QSBI(N)45-3-M11F	11	829	1334	318	245	350	161.2
QSBI(N)45-4-2-M15F	15	909	1419	318	245	350	175.0
QSBI(N)45-4-M15F	15	909	1419	318	245	350	175.0
QSBI(N)45-5-2-M18.5F	18.5	989	1539	318	245	350	202.8
QSBI(N)45-5-M18.5F	18.5	989	1539	318	245	350	202.8
QSBI(N)45-6-2-M22F	22	1069	1649	358	265	350	249.3
QSBI(N)45-6-M22F	22	1069	1649	358	265	350	249.3
QSBI(N)45-7-2-M30F	30	1149	1809	420	295	400	337.7
QSBI(N)45-7-M30F	30	1149	1809	420	295	400	337.7
QSBI(N)45-8-2-M30F	30	1229	1889	420	295	400	341.4
QSBI(N)45-8-M30F	30	1229	1889	420	295	400	341.5
QSBI(N)45-9-2-M30F	30	1309	1969	420	295	400	345.2
QSBI(N)45-9-M37F	37	1309	1969	420	295	400	366.2
QSBI(N)45-10-2-M37F	37	1389	2049	420	295	400	369.9
QSBI(N)45-10-M37F	37	1389	2049	420	295	400	369.9
QSBI(N)45-11-2-M45F	45	1469	2159	470	325	450	421.7
QSBI(N)45-11-M45F	45	1469	2159	470	325	450	421.7
QSBI(N)45-12-2-M45F	45	1549	2239	470	325	450	425.4
QSBI(N)45-12-M45F	45	1549	2239	470	325	450	425.4
QSBI(N)45-13-2-M45F	45	1629	2319	470	325	450	429.1

EXPECTED PERFORMANCE CURVE

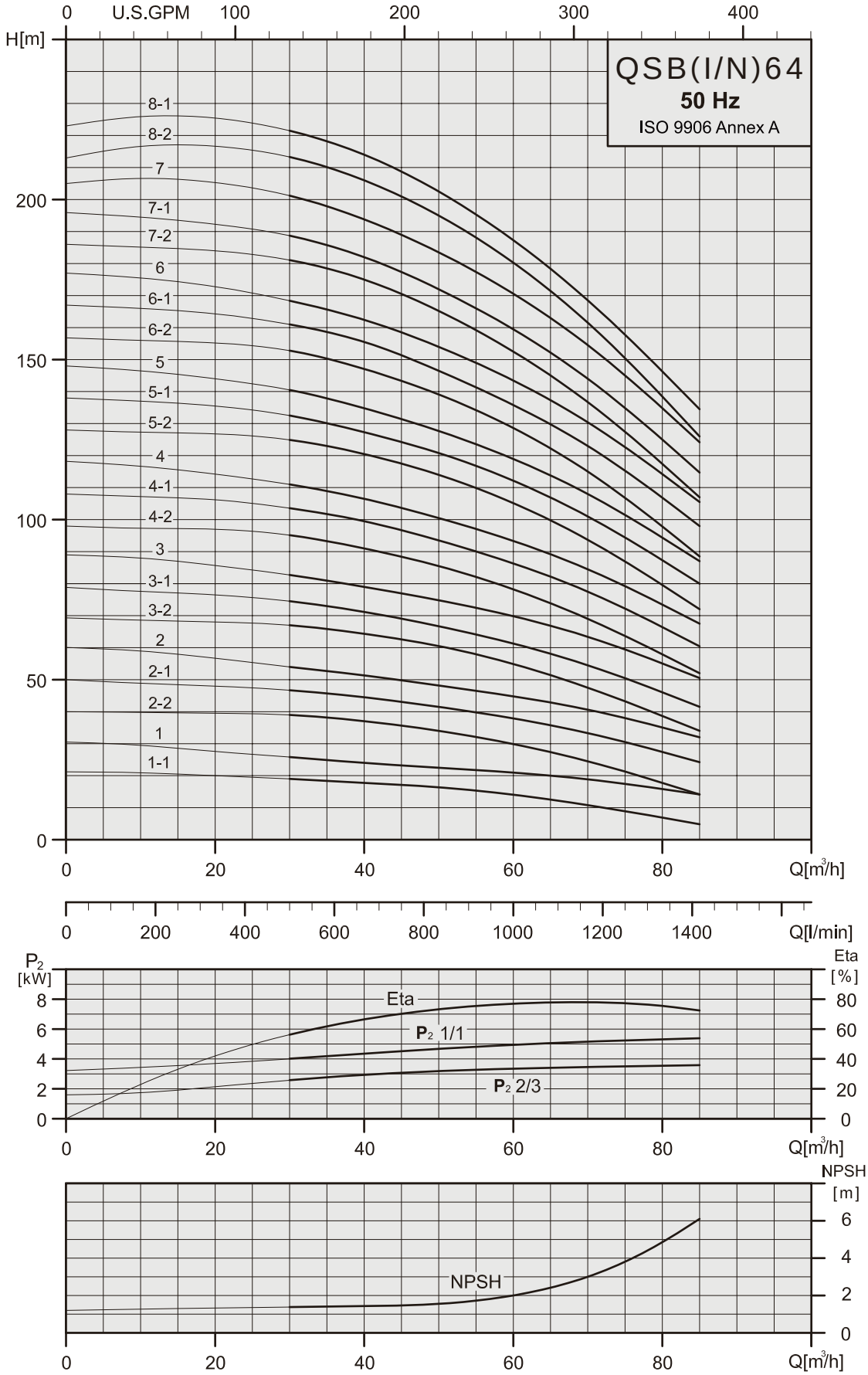

PUMP DIMENSION-QSB 64

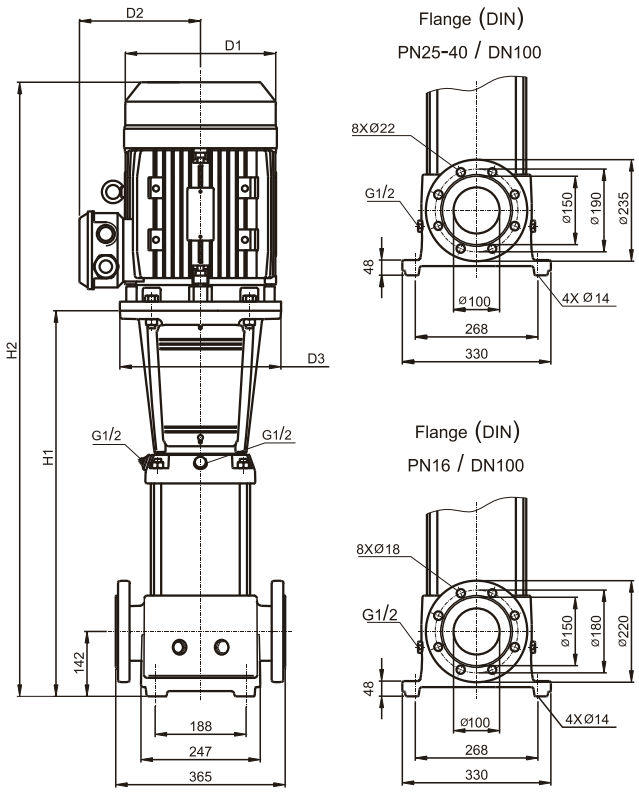

Pump type	Motor	QSB					
		Dimension[mm]					Net weight [kg]
	P_2	DIN flange		D1	D2	D3	
	[kW]	H1	H2				DIN flange
QSB64-1-1-M4.0F	4	563	889	220	161	280	88.9
QSB64-1-M5.5F	5.5	563	925	235	197	300	108.3
QSB64-2-2-M7.5F	7.5	646	1044	235	197	300	118.7
QSB64-2-1-M11F	11	756	1261	318	245	350	160.3
QSB64-2-M11F	11	756	1261	318	245	350	160.3
QSB64-3-2-M15F	15	838	1348	318	245	350	174.9
QSB64-3-1-M15F	15	838	1348	318	245	350	174.9
QSB64-3-M18.5F	18.5	838	1388	318	245	350	198.9
QSB64-4-2-M18.5F	18.5	921	1471	318	245	350	202.9
QSB64-4-1-M22F	22	921	1501	358	265	350	245.7
QSB64-4-M22F	22	921	1501	358	265	350	245.7
QSB64-5-2-M30F	30	1003	1663	420	295	400	334.3
QSB64-5-1-M30F	30	1003	1663	420	295	400	334.3
QSB64-5-M30F	30	1003	1663	420	295	400	334.3
QSB64-6-2-M30F	30	1086	1746	420	295	400	338.2
QSB64-6-1-M37F	37	1086	1746	420	295	400	359.2
QSB64-6-M37F	37	1086	1746	420	295	400	359.2
QSB64-7-2-M37F	37	1168	1828	420	295	400	363.3
QSB64-7-1-M37F	37	1168	1828	420	295	400	363.3
QSB64-7-M45F	45	1172	1862	470	325	450	411.4
QSB64-8-2-M45F	45	1255	1945	470	325	450	415.5
QSB64-8-1-M45F	45	1255	1945	470	325	450	415.5

PUMP DIMENSION-QSBI, QSBN 64

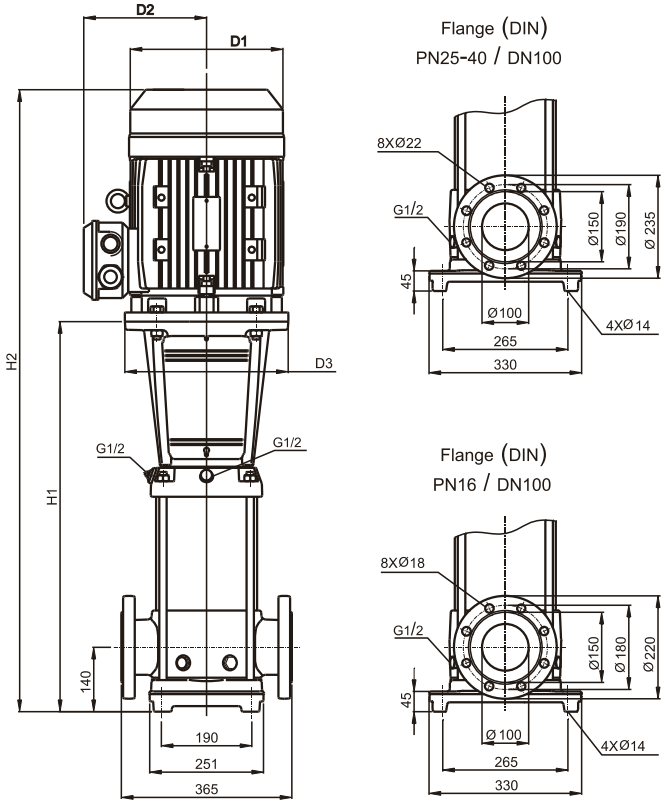

Pump type	Motor	QSBI, QSBN					
		Dimension[mm]					Net weight [kg]
	P_2	DIN flange		D1	D2	D3	
	[kW]	H1	H2				DIN flange
QSBI(N)64-1-1-M4.0F	4	563	889	220	161	280	81.8
QSBI(N)64-1-M5.5F	5.5	563	925	235	197	300	101.3
QSBI(N)64-2-2-M7.5F	7.5	646	1044	235	197	300	111.7
QSBI(N)64-2-1-M11F	11	756	1261	318	245	350	153.3
QSBI(N)64-2-M11F	11	756	1261	318	245	350	153.3
QSBI(N)64-3-2-M15F	15	838	1348	318	245	350	167.4
QSBI(N)64-3-1-M15F	15	838	1348	318	245	350	167.4
QSBI(N)64-3-M18.5F	18.5	838	1388	318	245	350	191.4
QSBI(N)64-4-2-M18.5F	18.5	921	1471	318	245	350	195.4
QSBI(N)64-4-1-M22F	22	921	1501	358	265	350	238.1
QSBI(N)64-4-M22F	22	921	1501	358	265	350	238.1
QSBI(N)64-5-2-M30F	30	1003	1663	420	295	400	326.7
QSBI(N)64-5-1-M30F	30	1003	1663	420	295	400	326.7
QSBI(N)64-5-M30F	30	1003	1663	420	295	400	326.7
QSBI(N)64-6-2-M30F	30	1086	1746	420	295	400	330.7
QSBI(N)64-6-1-M37F	37	1086	1746	420	295	400	351.7
QSBI(N)64-6-M37F	37	1086	1746	420	295	400	351.7
QSBI(N)64-7-2-M37F	37	1168	1828	420	295	400	355.7
QSBI(N)64-7-1-M37F	37	1168	1828	420	295	400	355.7
QSBI(N)64-7-M45F	45	1172	1862	470	325	450	403.8
QSBI(N)64-8-2-M45F	45	1255	1945	470	325	450	408.0
QSBI(N)64-8-1-M45F	45	1255	1945	470	325	450	408.0

EXPECTED PERFORMANCE CURVE

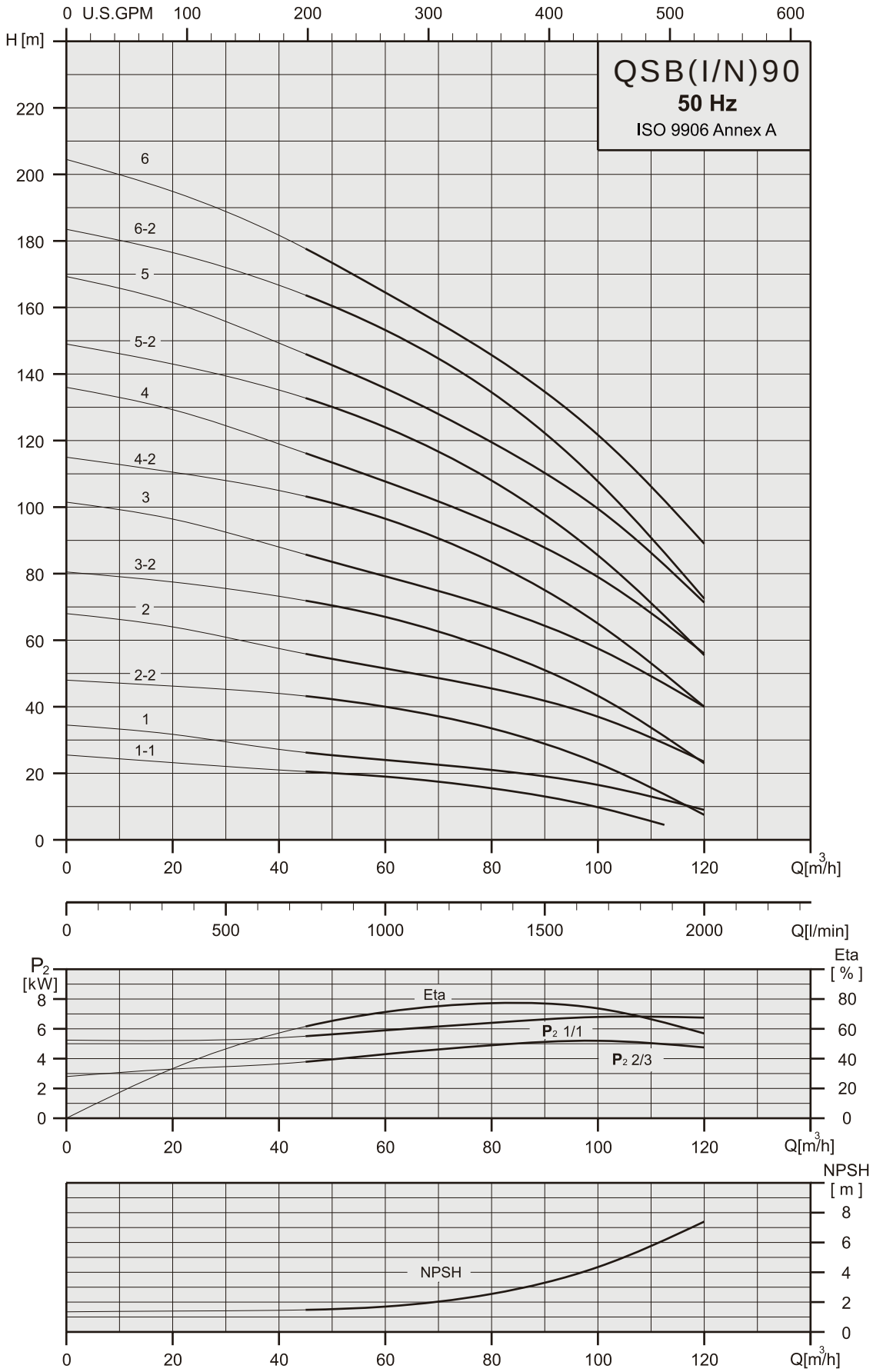

PUMP DIMENSION-QSB 90

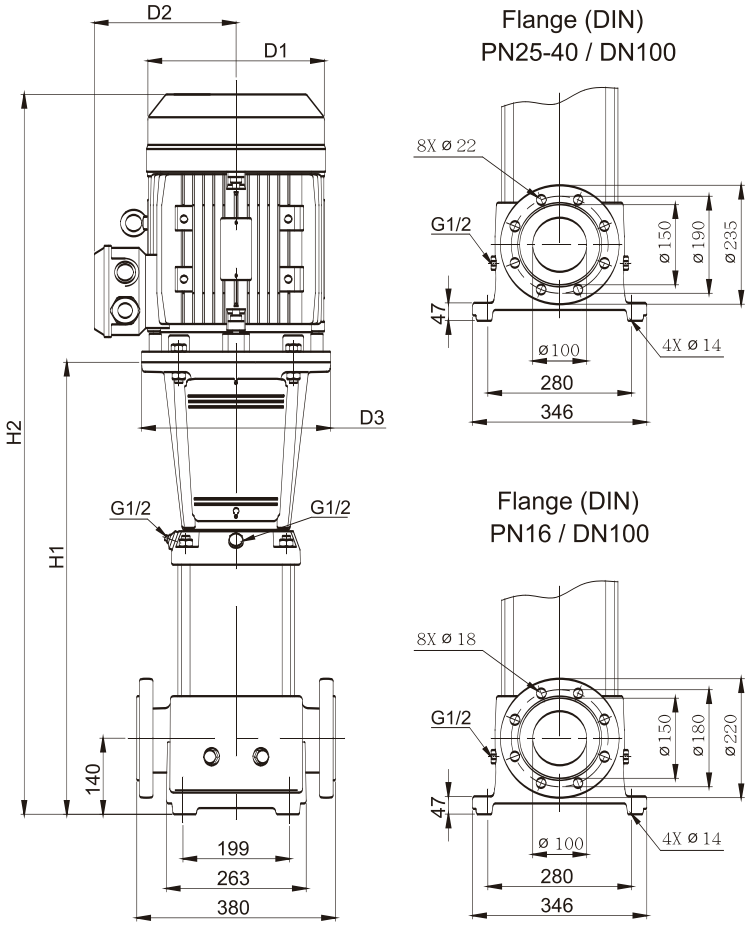

Pump type	Motor	QSB					
		Dimension[mm]					Net weight [kg]
	P_2	DIN flange		D1	D2	D3	
	[kW]	H1	H2				DIN flange
QSB90-1-1-M5.5F	5.5	572	934	235	197	300	122.2
QSB90-1-M7.5F	7.5	572	970	235	197	300	128.5
QSB90-2-2-M11F	11	774	1279	318	245	350	175.4
QSB90-2-M15F	15	774	1284	318	245	350	185.4
QSB90-3-2-M18.5F	18.5	866	1416	318	245	350	214.7
QSB90-3-M22F	22	866	1446	358	265	350	257.5
QSB90-4-2-M30F	30	958	1618	420	295	400	347.3
QSB90-4-M30F	30	958	1618	420	295	400	347.3
QSB90-5-2-M37F	37	1050	1710	420	295	400	347.9
QSB90-5-M37F	37	1050	1710	420	295	400	347.9
QSB90-6-2-M45F	45	1142	1832	470	325	450	428.2
QSB90-6-M45F	45	1142	1832	470	325	450	428.3

PUMP DIMENSION-QSBI, QSBN 90

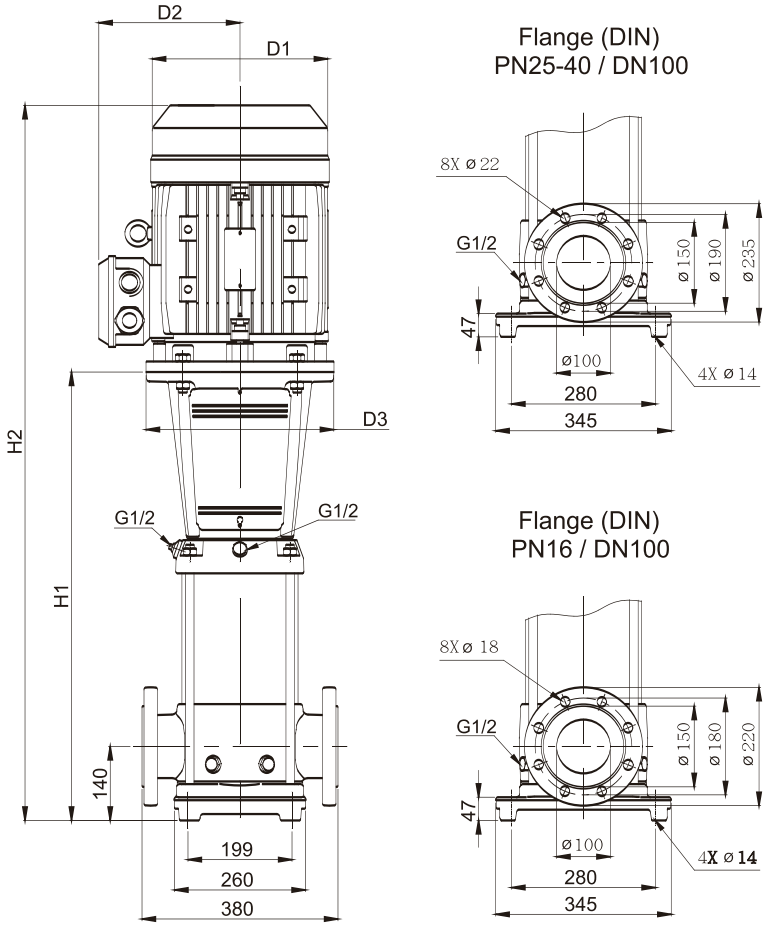

Pump type	Motor	QSBI, QSBN					
		Dimension[mm]					Net weight [kg]
	P_2	DIN flange		D1	D2	D3	
	[kW]	H1	H2				DIN flange
QSBI(N)90-1-1-M5.5F	5.5	576	938	235	197	300	112.1
QSBI(N)90-1-M7.5F	7.5	576	974	235	197	300	118.4
QSBI(N)90-2-2-M11F	11	778	1283	318	245	350	165.2
QSBI(N)90-2-M15F	15	778	1288	318	245	350	175.2
QSBI(N)90-3-2-M18.5F	18.5	870	1420	318	245	350	204.4
QSBI(N)90-3-M22F	22	870	1450	358	265	350	247.2
QSBI(N)90-4-2-M30F	30	962	1622	420	295	400	336.9
QSBI(N)90-4-M30F	30	962	1622	420	295	400	336.9
QSBI(N)90-5-2-M37F	37	1054	1714	420	295	400	364.9
QSBI(N)90-5-M37F	37	1054	1714	420	295	400	365.0
QSBI(N)90-6-2-M45F	45	1146	1836	470	325	450	418.0
QSBI(N)90-6-M45F	45	1146	1836	470	325	450	418.1

EXPECTED PERFORMANCE CURVE

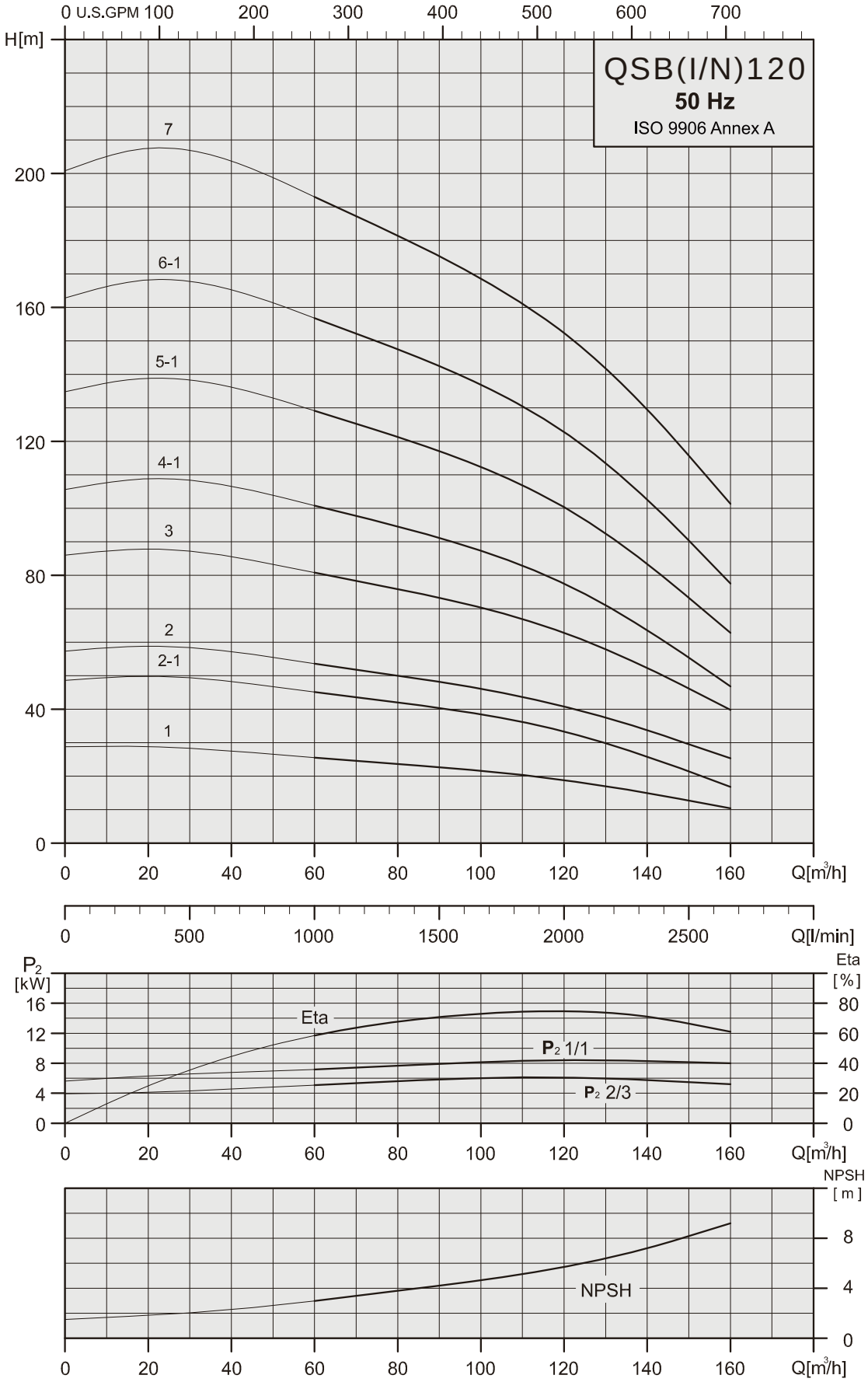

PUMP DIMENSION-QSB 120

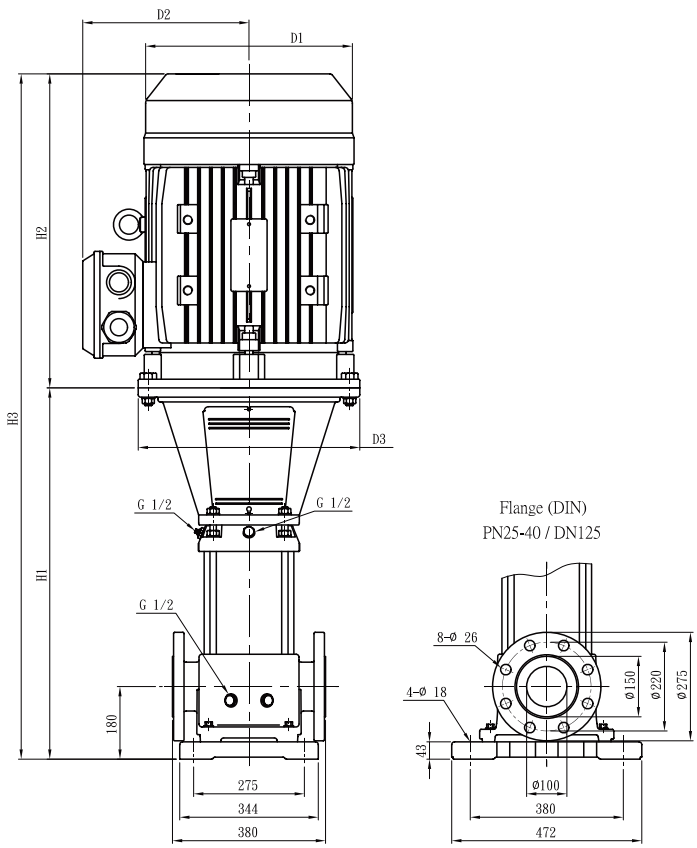

Pump type	Motor	QSB						
		Dimension[mm]						Net weight [kg]
	P_2	DIN flange			D1	D2	D3	
	[kW]	H1	H2	H3				DIN flange
QSB120-1-M11F	11	834	505	1339	318	245	350	201.1
QSB120-2-1-M18.5F	18.5	990	550	1540	318	245	350	245.1
QSB120-2-M22F	22	990	580	1570	358	265	350	291.8
QSB120-3-M30F	30	1145	660	1805	420	295	400	382.5
QSB120-4-1-M37F	37	1301	660	1961	420	295	400	413.5
QSB120-5-1-M45F	45	1460	690	2150	470	325	450	471.6
QSB120-6-1-M55F	55	1642	770	2412	510	355	550	604.8
QSB120-7-M75F	75	1797	845	2642	580	410	550	736.4

PUMP DIMENSION-QSBI, QSBN 120

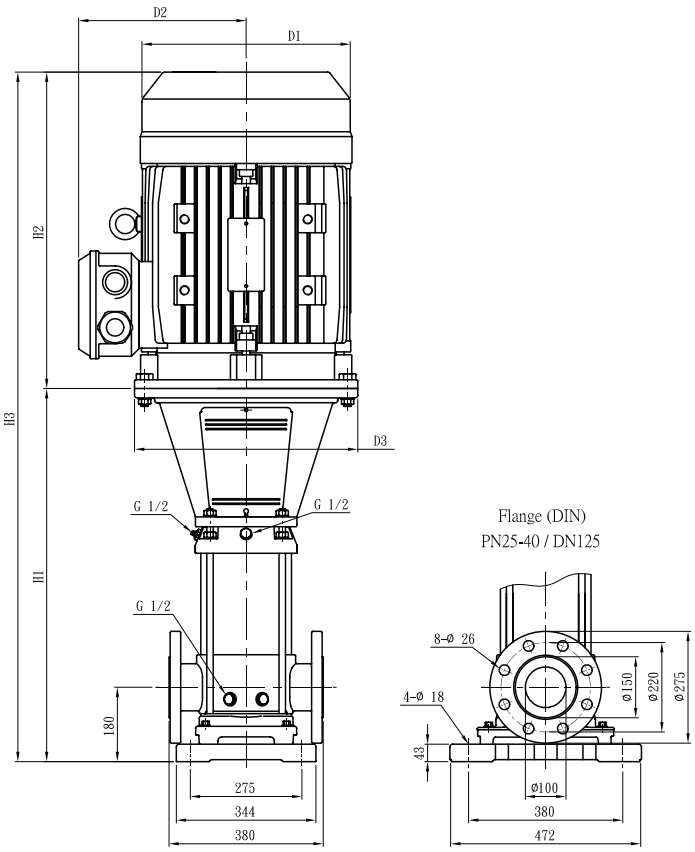

Pump type	Motor	QSBI, QSBN						
		Dimension[mm]						Net weight [kg]
	P_2	DIN flange			D1	D2	D3	
	[kW]	H1	H2	H3				DIN flange
QSBI(N)120-1-M11F	11	837	505	1342	318	245	350	185.3
QSBI(N)120-2-1-M18.5F	18.5	993	550	1543	318	245	350	229.5
QSBI(N)120-2-M22F	22	993	580	1573	358	265	350	276.1
QSBI(N)120-3-M30F	30	1149	660	1809	420	295	400	366.9
QSBI(N)120-4-1-M37F	37	1304	660	1964	420	295	400	398.1
QSBI(N)120-5-1-M45F	45	1463	690	2153	470	325	450	456.3
QSBI(N)120-6-1-M55F	55	1645	770	2415	510	355	550	589.8
QSBI(N)120-7-M75F	75	1800	845	2645	580	410	550	721.5

EXPECTED PERFORMANCE CURVE

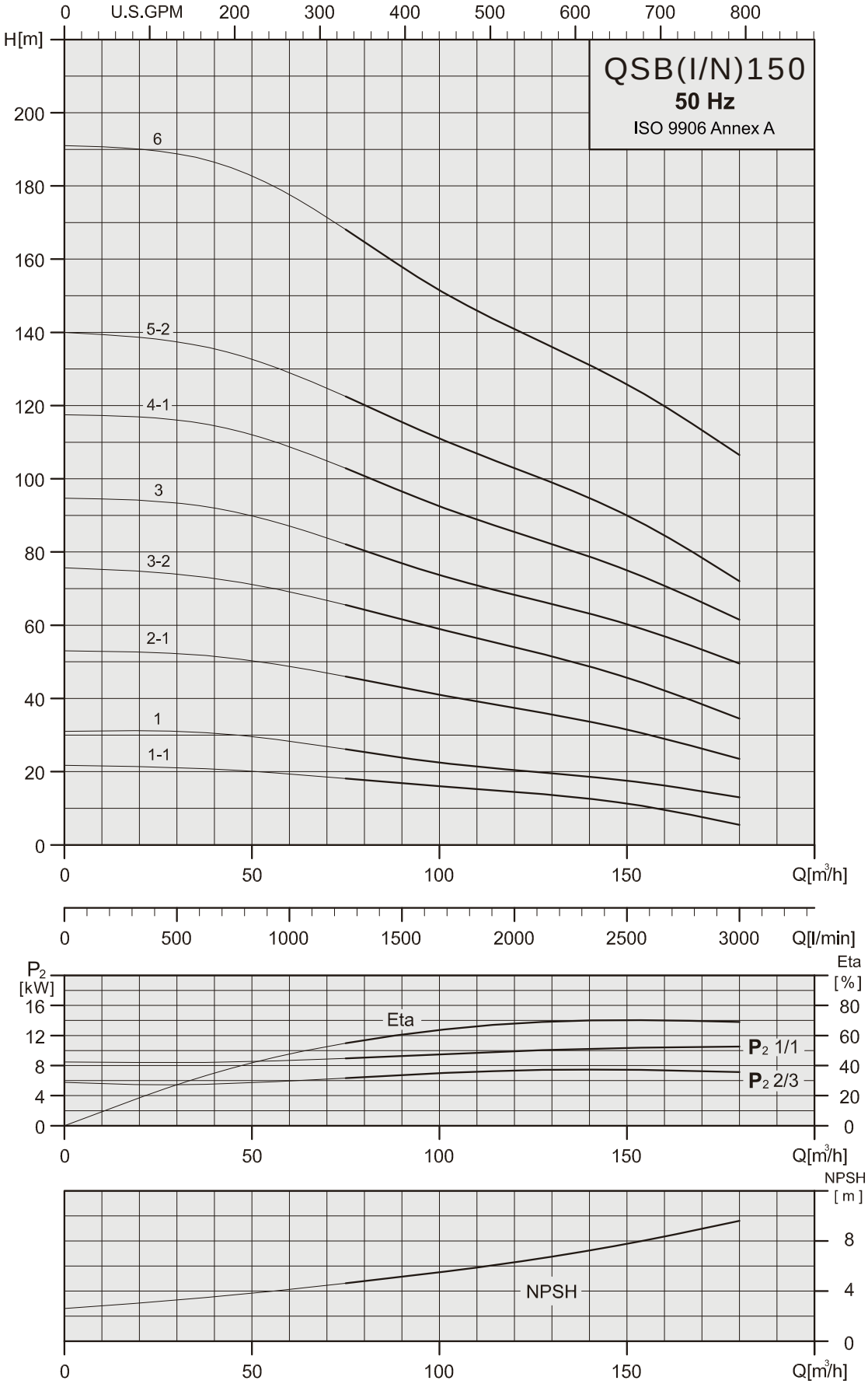

PUMP DIMENSION-QSB 150

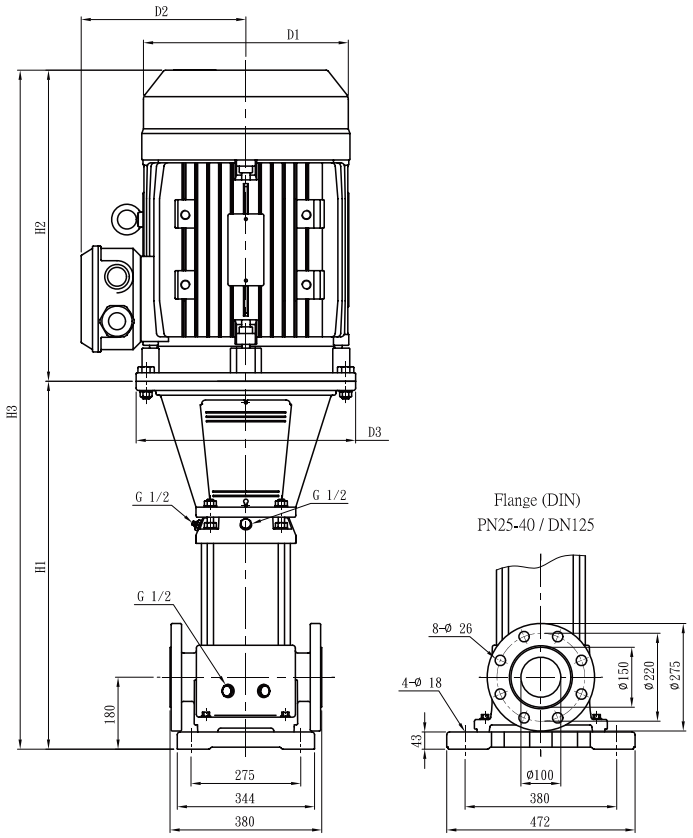

Pump type	Motor	QSB						
		Dimension[mm]						Net weight [kg]
	P_2	DIN flange			D1	D2	D3	
	[kW]	H1	H2	H3				DIN flange
QSB150-1-1-M11F	11	834	505	1339	318	245	350	201.0
QSB150-1-M15F	15	834	510	1344	318	245	350	211.0
QSB150-2-1-M22F	22	990	580	1570	358	265	350	287.8
QSB150-3-2-M30F	30	1145	660	1805	420	295	400	382.3
QSB150-3-M37F	37	1145	660	1805	420	295	400	403.4
QSB150-4-1-M45F	45	1305	690	1995	470	325	450	461.4
QSB150-5-2-M55F	55	1486	770	2256	510	355	550	594.7
QSB150-6-M75F	75	1642	845	2487	580	410	550	726.0

PUMP DIMENSION-QSBI, QSBN 150

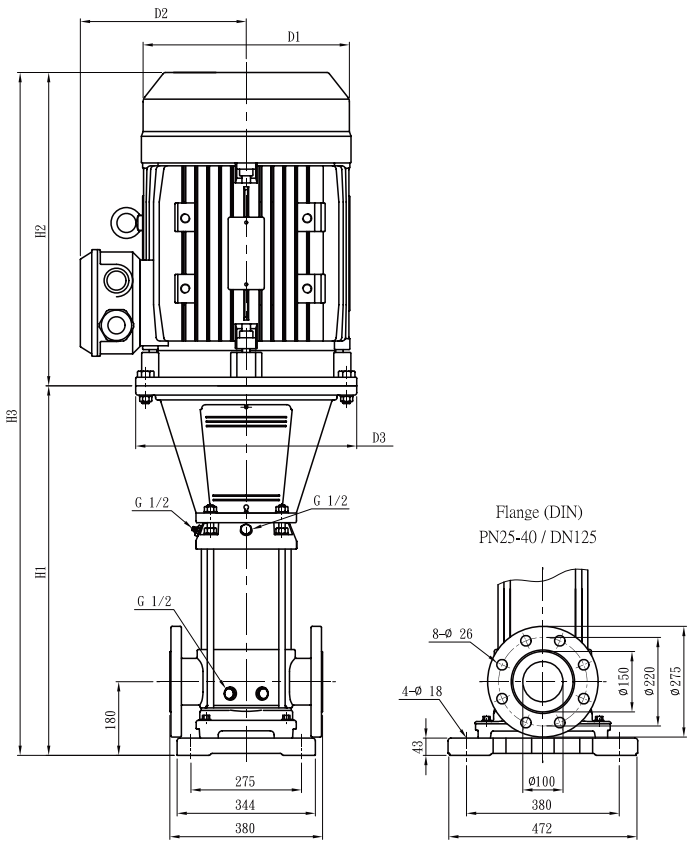

Pump type	Motor	QSBI, QSBN						
		Dimension[mm]						Net weight [kg]
	P_2	DIN flange			D1	D2	D3	
	[kW]	H1	H2	H3				DIN flange
QSBI(N)150-1-1-M11F	11	837	505	1342	318	245	350	174.4
QSBI(N)150-1-M15F	15	837	510	1347	318	245	350	184.4
QSBI(N)150-2-1-M22F	22	993	580	1573	358	265	350	271.6
QSBI(N)150-3-2-M30F	30	1148	660	1808	420	295	400	366.2
QSBI(N)150-3-M37F	37	1148	660	1808	420	295	400	387.2
QSBI(N)150-4-1-M45F	45	1308	690	1998	470	325	450	445.4
QSBI(N)150-5-2-M55F	55	1489	770	2259	510	355	550	580.8
QSBI(N)150-6-M75F	75	1645	845	2490	580	410	550	710.5

TECHNICAL DATA

■ PUMPED LIQUIDS

QSB (I, N) pumps can handle a wide variety of liquids, each with its own characteristic.

QSB(I)

Non-corrosive liquids

For fluid transfer, circulation and pressure boosting of cold or hot clean water.

QSBN

Industrial liquids

Light acids

The fluids covered in the list are not complete. Data on the application limits of different pump materials when handling any of the listed fluids are considered to be the best choices. However, the table is intended as a general guide only, and cannot replace actual testing of the pumped fluids and pump materials under specific working conditions.

When choosing the pump version, sufficient attention should be given to the flow medium, such as density, solidification point, viscosity as well as ex-protection requirement. The limits of applicability of the pumps, based on pressure and temperature must also be considered.

● Recommended

Pumped fluid	"Fluid Concentration, temperature"	QSB(I)		QSBN	
		EPDM	Viton	EPDM	Viton
Acetic acid anhydride	25°C			●	
Alkaline cleaner		●			
Aluminium sulphate	10%, 25°C				●
Ammonia water (A. hydroxide)	20%, 40°C	●			
Ammonia hydrogen carbonate	10%, 40°C	●		●	
Benzoic acid	10%, 90°C				●
Boric acid	Unsaturated solution, 60°C				●
Butanol	60°C	●			
Calcium acetate	30%, 50°C	●			
Calcium hydroxide	Saturated solution, 50°C	●			
Chromic acid	1%, 20°C				●
Condensate	90°C	●			
Copper sulphate	Unsaturated solution, 60°C				●
Deionic (fully desalinated water)	50°C			●	
Ethanol	100%, 20°C	●			
Ehylene glycol/Diethylene glycol	40%, 70°C	●	●	●	●
Fixer	25°C				●
Formic acid	5%, 20°C			●	

TECHNICAL DATA

Pumped fluid	"Fluid Concentration, temperature"	QSB(I)		QSBN	
		EPDM	Viton	EPDM	Viton
Fruit juice	50°C				●
Glycerine	50%, 50°C	●			
Heating oil (Light)		●			●
Hydraulic oil	100%, 100°C		●		
Isopropanol		●			
Lactic acid	10%, 20°C				●
Linoleic acid	100%, 20°C	●			
Linseed oil	60°C		●		
Liqueur	60°C				●
Maize oil	80°C		●		
Maleic acid	50%, 50°C				●
Methanol	100%, 20°C	●			
Motor oil	100%, 80°C	●			
Oil-water-mixture	100°C		●		
Oxalic acid	1%, 20°C			●	
Peanut oil	100%, 80°C		●		
Phosphoric acid	20%, 20°C			●	
Polyglycols	90°C		●		●
Polyethylene glycols	40%, 70°C	●			
Potassium carbonate	10%, 60°C	●			
Potassium hydrogen carbonate	10%, 60°C	●			
Potassium permanganate	5%, 20°C			●	
Potassium sulphate	Unsaturated solution, 80°C			●	
Rapeseed oil	100%, 80°C		●		
Silicone oil	100%		●		
Sodium carbonate	10%, 60°C			●	
Sodium hydroxide	25%, 50°C			●	
Sodium nitrate	Unsaturated solution, 80°C			●	
Sodium phosphate	5%, 100°C			●	
Sodium sulphate	10%, 60°C			●	
Sulphuric acid	5%, 25°C				●
Water					
Swimming pool water	35°C	● QSBI		●	
Deionic	50°C			●	
Distilled water	50°C			●	
Decarbonated water				●	
Soft water				●	
Heating water				●	
Boiler water				●	
Pure water				●	
Rinsing water		● QSBI		●	

IMPORTANT SAFETY PRECAUTIONS

Always read the manual thoroughly and fully comprehend the contents for safe operation before starting use.
Precautions for using products safely and for preventing personal injuries or physical damage are given in the manual.

- Matters falling under the following may not be covered by the warranty: uses out of the specified scope of application, failure to comply with precautions, improper repairs and alterations, matters arising from natural disasters, matters arising from the installation environment (improper power source, foreign objects, sand etc.), non-compliance with laws and regulations or standards pertaining thereto, accidental or intentional damage or injury, replacement of consumable parts, defects due to resale, etc.

- Do not use the product for applications out of the product specifications. Doing so may cause electric shock, fire, water leakage, etc.

- Have spare equipment ready when using pumps for equipment for living things (fish farms, fish tanks, aquariums, etc.) or critical equipment.

- Pump failure may cause lack of oxygen and water quality deterioration, and may affect the lives of the living things.
  When using pumps for equipment for living things (fish farms, fish tanks, aquariums, etc.), do not install the pump in the tank where the living things are put into. The current leakage or sealing liquid leak from the mechanical seal may cause the death of the living things.

- If used to transport food-related items, give due consideration to the materials used. Contamination by foreign objects may occur.

- Avoid using for living things which disagrees with copper alloy. It may affect the lives of the living things.

- Select a product which is appropriate for your application. Inappropriate use of products may cause accidents.

- Conduct construction in accordance with the applicable laws and regulations (the Technical Standards of Electric Installation, interior wiring regulation, Building Standards Act, Water Supply Law, etc.). Not only does it violate the laws and regulations, but it also may cause injuries due to electric shock, fire, falling and tipping over.

- Do not use in places where people are assumed to get in contact with the product (baths, pools, lakes, etc.). Electric leak may occur and cause electric shock.

- Depending on the equipment, attach a filter etc. appropriate for your application on the discharge side before use, perform thorough flushing to check that there is no contamination. Cutting oil, rubber mold releasing agent, foreign objects etc. from the manufacturing line and cutting oil, foreign objects etc. from the pipeline may contaminate the liquid which is to be handled.

- Do not operate pumps with a specification of 50Hz at 60Hz. It may cause damage due to overpressure or burn damage of motors etc. due to overload. Do not operate pumps with a specification of 60Hz at 50Hz. Pump performance may be reduced.

- Only repair technicians may disassemble, repair, modify the product or replace cables. Defects may cause failure, damage, electrification or fire.

- It is recommended that both periodic and daily inspections be performed in order to ensure that the pump will operate reliably for as long as possible. Failure to perform inspections may lead to pump failure, accidents etc. For periodic inspections, please consult your distributer or our nearest sales office.

Note
Specifications/Configurations may be altered as a result of improvements and such.
Unauthorized reproduction of this document is prohibited.